2 Locations

2024
July

A.N. MARTIN SYSTEMS

Helping Farmers Feed The World Since 1979

GRAIN HANDLING EQUIPMENT, PARTS & SUPPLIES

www.ANMartinSystems.com

MAIN OFFICE
1110 Clyde Marengo Rd.
Clyde, NY 14433
P: (315) 923-9118
F: (315) 923-7027

Largest Inventory In The Northeast!

WESTERN NY
7695 Big Tree Rd. (Rt. 63)
Pavilion, NY 14525
P: (585) 584-9210
F: (585) 584-9208

Family Owned

& Operated

Where It's All About...

S -afety

P -roductivity

E -nthusiam

E -xperience

D -one Right

*Pages in Red Indicate New or Updated Information Since Previous Version

TABLE OF CONTENTS

EQUIPMENT	Section 2
Grain Vacs, Hoses & Accessories	2-3
Moisture Testers	4-6
Grain Cleaners	7-11
Hammer Mills & Feed Blower System	12-18
FEED SYSTEMS	**Section 3**
Bulk Feed Tanks	2-7
Bulk Feed Tank Accessories	8-9
Bulk Feed Tank Unloading Options	10-16
BFT Chain Agitators	17
Flex-Flo Systems	18-32
BIN ACCESSORIES	**Section 4**
Grain Spreaders	2-3
Bin Hardware & Sealer	4
Floor Supports	5
Axial Aeration Fans	6-11
Centrifugal Aeration Fans	12-21
Roof Vents & Roof Exhausters	22
Ladders & Platforms	23-29
Bin Level Indicators	30-39
In-Bin Grain Sampler	40
Bin Fall Protection	40
SPOUTING & ACCS.	**Section 5**
Spouting	2-3
Spout Accessories	4-7
Stainless Spout Accessories	8
Plate Magnet Seperators	9
Liners & Patches	10-11
ELEVATOR ACCS	**Section 6**
Cushion Boxes & Valves	2-3
Slide Gates	4-5
Distributor Pipe Assembly	6
Manwalks / Calkwalks	6
Cable & Accessories	7
Belting, Splices & Slide Lagging	8-9
Elevator Buckets & Hardware	10-15
AUGERS	**Section 7**
Bulk Tank & Utility Augers	2-3
Auger Accessories	4
Shafts, Hangers & Bushings	5
U-Troughs & Accessories	6-8
Replacement Screws & Flighting	9-12
AUGERS *(cont.)*	**7 *(cont)***
Portable Augers	13-21
Auger Powerheads	22-28
Powersweep Parts	29-37
MOTORS & ACCS.	**Section 8**
Auger HP Requirements	2-3
Fan Motors	4-5
Weg Farm-Duty Motors	6
Pulleys & Taper-Lock Bushings	7-9
V-Belts	10-11
Capacitors	12-13
VFD's & Soft Starts	14-20
CHAIN & SPROCKETS	**Section 9**
Sprockets	2-7
Roller & Conveyor Chains	8-10
BEARINGS	**Section 10**
Import Bearings	2-5
Dodge Bearings	6-28
Auto-Greasers	29
Bearing Inserts & Flanges	30-31
MISC.	**Section 11**
Shaft-Mount Reducers	2-5
MARTIN-WAY MFG.	**Section 12**
INFORMATIONAL PAGES	**Section 13**
Equilibrium Moisture Content Chart	2-3
Grain Stroage Life Wheel	4
V-Belt Length Calculator	5
Elevator Belt Speed Chart	5
Spouting Rated Capacities & Weights	6
Convert Bushel/Hr to Ton/Hour	7
GSI Floor Support Spacing	8-11
Sukup Floor Support Spacing	12-18
Ladder Fall Protection	19

Call for Pricing & Availability

Not Responsible for Misprints or Errors

From Design…

Let Our Team Design & Build A System That Meets Your Needs, Stays Within Your Budget & Exceeds Your Expectations!

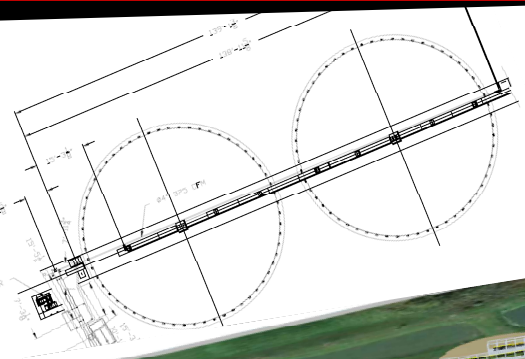

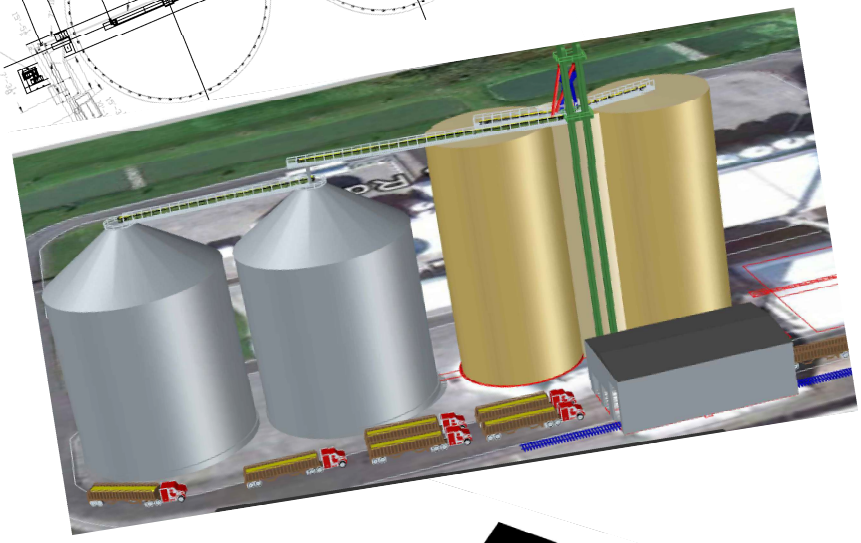

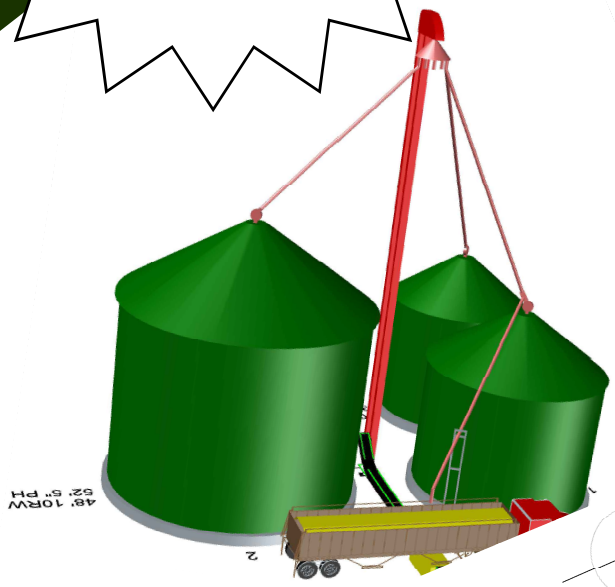

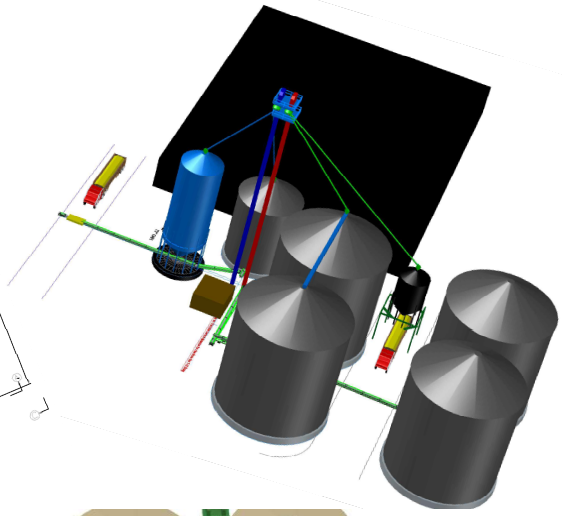

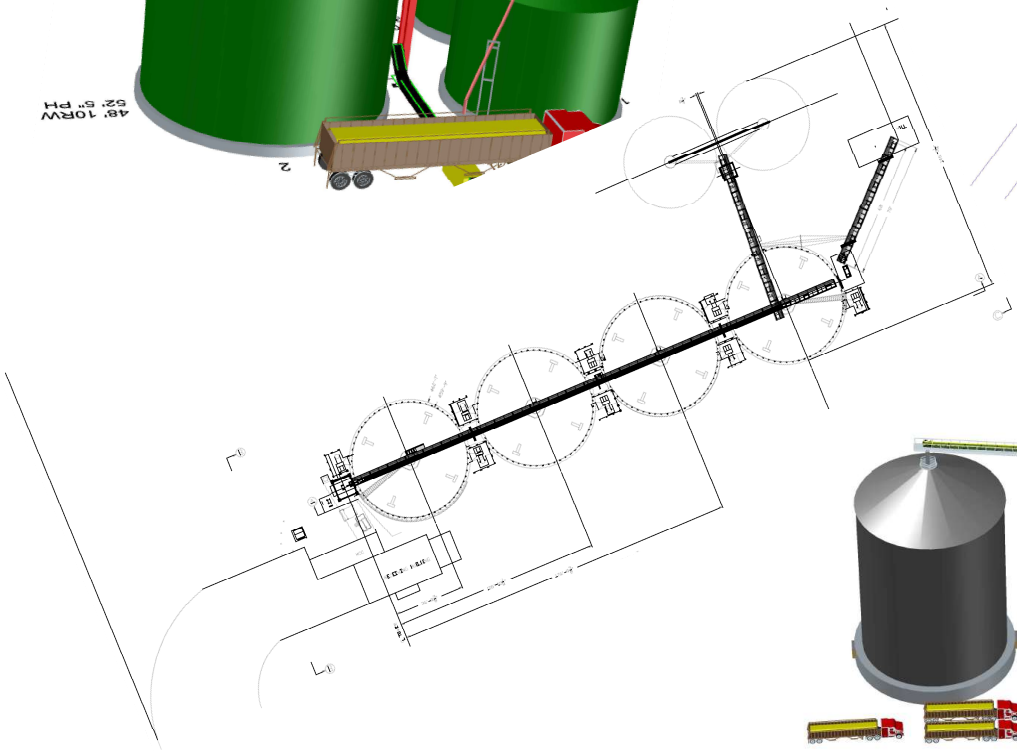

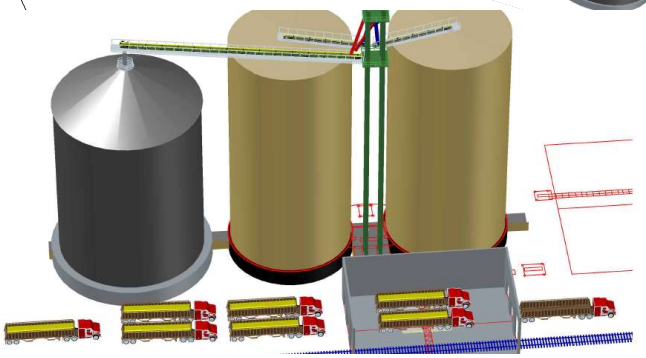

...To Completion

Let Us Draw Your Existing Facility Along With Proposed Upgrades Using 2-D AutoCAD and 3-D Solid Works Software So You Can Optimize Your Equipment And Maximize Your Investment!

No Project
Too Big
or Too Small

2 - EQUIPMENT

Grain Vacs, Hoses & Accessories	2-3
Moisture Testers	4-6
Grain Cleaners	7-11
Hammer Mills & Feed Blower System	12-18

	6614 PC	6614 DLX
HEIGHT	95" (241 cm)	95" (241 cm)
WIDTH	92" (234 cm)	92" (234 cm)
LENGTH	105" (267 cm)	105" (267 cm)
WEIGHT	2814 lbs (1279 kg)	3014 lbs (1370 kg)
DISCHARGE HEIGHT	15.3'(4.7m) maximum - 8"(0.2m) minimum	15.3'(4.7m) maximum - 8"(0.2m) minimum
HP REQUIRED	110-130 hp	110-130 hp
PTO SPEED	1000 RPM	1000 RPM
LINE SIZE	5" (125 mm) & 6" (150 mm)	5" (125 mm) & 6" (150 mm)
TIRES	Two standard farm implement	Two standard farm implement
WHEELS	15" (38 cm), 5 stud	15" (38 cm), 5 stud
BLOWER	#614 Walinga SRT (Sound Reduction Type), CORVOR™ Hard Coating, Positive Displacement Blower	#614 Walinga SRT (Sound Reduction Type), CORVOR™ Hard Coating, Positive Displacement Blower
AIRLOCK	#1618 cast iron shell, precision machined housing, 10 vane rotor Hardox steel tips, hydraulically driven, reversible rotation	#1618 cast iron shell, precision machined housing, 10 vane rotor Hardox steel tips, hydraulically driven, reversible rotation
DRIVE	Tongue mounted drive shaft with V-type 5 groove sheaves & belts	Tongue mounted drive shaft with V-type 5 groove sheaves & belts
HYDRAULICS	Hoses & quick couplings Open/closed centre system	Self Contained
RECEIVER	28" dia. (71 cm) two piece, single inlet	28" dia. (71 cm) two piece, dual inlets
PRECLEANER	24" dia. (61 cm)	24" dia. (61 cm)
SAFETY	Vacuum/Pressure relief valves	Vacuum/Pressure relief valves

CAPACITY*	Bu/hr*	Tonnes/hr*
Corn & Barley	3600	92
Wheat	3200	84
Soybeans	2800	75

Due to continuous product development, specifications are subject to change without notice. Some items shown may be optional.
*Capacities based on using 12' (3.65 m) suction line and truck loading kit. Capacity will vary with condition of product.

Call for Pricing On New Grain Vacs
or
See Below For Rental Information

GRAIN VAC RENTAL

1-Day - $350.00
Additional Day(s) - $200/Day

***Cleaning Charge of $100 Will Be Applied If Vac Is Not Clean When Returned**

Delivery/Pickup: $5.00/Mile
(Subject To Availability)

Grain Vac Hose

SIZE	DESCRIPTION	PART #
4"	Black Rubber Grain Vac Hose	36-16025-6
5"	Black Rubber Grain Vac Hose	36-15620-6
5"	VHD Heavy-Duty Vinyl Clear Grain Vac Hose	36-91687-6
6"	Black Rubber Grain Vac Hose	36-15621-6
6"	VHD Heavy-Duty Vinyl Clear Grain Vac Hose	36-73801-6

PRE-ASSEMBLED VAC HOSES

SIZE	DESCRIPTION	PART #
5" x 14'	Black Poly Vac Hose, 5" Female / 6" Male, Camlock, Light Duty	GV-HOSE-P-5x14-CL-5Fx6M
5" x 14'	Black Poly Vac Hose, 5" Female / 6" Male, Camlock	GV-HOSE-R-5x14-CL-5Fx6M
5" x 14'	Galvanized Steel Vac Hose, 5" Female / 6" Male, Camlock	GV-HOSE-S-5x14-CL-5Fx6M
6" x 14'	Black Poly Vac Hose, 6" Female / 6" Male, Camlock	GV-HOSE-R-6x14-CL-6Fx6M
6" x 10'	Galvanized Steel Vac Hose, 6" Female / 6" Male, Camlock	GV-HOSE-S-6x10-CL-6Fx6M

COUPLERS & ACCESSORIES

WALINGA COUPLERS & ACCESSORIES

DESCRIPTION	PART #
1/4" Coupler Screw	94-05182-6
4" Aluminum DF4 Coupling F/ Rubber Hose	38-28021-5
4" Aluminum DM4 Coupling F/ Rubber Hose	38-28033-5
4" Female Coupler F/ 2 Tailbolts (Used On Solid Tubes)	38-36781-5
4" Male Coupler (DM4)	38-00397-5
5'' DM5 Screw Tube Coupling	38-03755-5
5" Quickon Insert F/ 38-14647-6 Coupler	38-15553-6
6'' Quick-On Coupler	38-14648-6
6" Male Coupler (DM6)	38-07798-5
6" O-Ring (DM6)	96-08521-6
Cap Screw (5/15-18-5/8)	94-08781-6
DF5 Tube Assy W/O Tailbolts	38-36287-5
DF6 Tube Assy W/O Tailbolts Coupler	38-36299-5
DM4 Coupling Assy - Weldable	38-29578-4
DM4 Swivel Coupling w/ Hose Shank	38-74368-5
DM5 Coupling Assy - Weldable	38-29579-4
DM6 Coupling Assy - Weldable	38-29580-4
Flat Gasket 6-3.8'' Dia For 5'' Hose	96-13281-6
Flat Rubber Ring Gasket (7.3/8" Dia.)	96-13067-6
Rubber Hose End w/ DM4 Coupling	38-09087-5
Tailbolts, 1/2-13 x1 f/ Walinga Female Couplers	94-09185-5

ADAPTERS

DESCRIPTION	PART #
5" to 4" Reducer	GV-ADAP-5X4-RD
5" to 6" HD Reducer	GV-ADAP-5X6-RD-HD
6" Hose-End Reducer	GV-ADAP-6-RD-HE
6" to 4" Reducer	GV-ADAP-6X4-RD
6" to 5" Reducer	GV-ADAP-6X5-RD

CAMLOCK FITTINGS

DESCRIPTION	PART #
4" Aluminum Cap	GV-CL-4F-CAP
4" Female, Bolt-On Aluminum	GV-CL-4F-CPL-B
4" Male, Bolt-On Aluminum	GV-CL-4M-CPL-B
4" Male, Plug Aluminum	GV-CL-4M-PLG
5" Aluminum Cap	GV-CL-5F-CAP
5" Female, Bolt-On Aluminum	GV-CL-5F-CPL-B
5" Male, Bolt-On Aluminum	GV-CL-5M-CPL-B
5" Male, Plug Aluminum	GV-CL-5M-PLG
6" Aluminum Cap	GV-CL-6F-CAP
6" Female, Bolt-On Aluminum	GV-CL-6F-CPL-B
6" Male, Bolt-On Aluminum	GV-CL-6M-CPL-B
6" Male, Plug Aluminum	GV-CL-6M-PLG

DICKEY-john CORPORATION

MINI GAC®

Award Winning Handheld

Choose the mini Gac for highly accurate moisture testing

* Easy & Accurate
* Menu-driven operating system
* Automatuc temperature correction
* Used for over 450 grains and products
* No screw cap which can damage grains
* Internal scale (no pre-weighing)
* USB compatibility for calibration uploading

ITEM #: MINIGAC1R

*See Note Below On Pricing

MINI GAC® PLUS

Award Winning Handheld

Highly accurate moisture testing, the ONLY handheld to accurately test weight

* Easy & Accurate
* Menu-driven operating system
* Automatuc temperature correction
* Used for over 450 grains and products
* No screw cap which can damage grains
* Internal scale (no pre-weighing)
* USB compatibility for calibration uploading
* Test weight readout

ITEM # MINIGAC1PR

*See Note Below On Pricing

MINI GAC® 2500

Take Elevator 149-MHz/UGMA Technology To The Field

Highly accurate moisture testing

* Menu Driven Interface
* Eliminates Pre-Weighing w/ Internal Scale
* Tests Hot or Cold Between 32° and 122°F
* Moisture Range from 5-45%
* No screw cap which can damage grains
* Temp Difference: 36°F From Instrument to Grain Sample
* USB compatibility for calibration uploading
* Operating Temperture: 40-113°F

ITEM # MINIGAC2500BT

* See Note Below On Pricing

ACCESSORIES FOR MOBILE MOISTURE TESTERS	
Description	**Part #**
Funnel Scoop Assy	467890860S1
Power Wall Adapter	467950155
MiniGac HHMT Accessory Package	MiniGacACCPK

REPLACEMENT PARTS FOR MOBILE TESTERS	
Description	**Part #**
Decal	462331463
Pouring Cup, Molded	467890140
Battery Door, A20P MiniGac	467890751
Power Wall Adapter	467950155

*** DUE TO PARTS SHORTAGES, TESTERS MAY INCUR A SURCHARGE IN ADDITION TO PRICES LISTED. PLEASE CALL TO CONFIRM CURRENT PRICING**

GAC® 500XT

Compact, Portable Design

Analyze grain for moisture, temperature & test weight in the field, at the bin or anywhere on the farm

* Portable
* Printer compatible
* Stores up to 16 calibrations
* Automatic bulk density compensation
* Power source choices of 110/220 volt or 12 volt
* Automatic temperature correction
* Used for over 450 grains and products

ITEM # GAC500XTR

DICKEY-john CORPORATION

ITEM # GAC2100AGZS9

GAC® 2100-AGRI Accuracy For Specialty Crops

The instrument of choice for niche markets, the GAC 2100-Agri provides immediate moisture, temperature and test weight for peanuts, almonds, pistachios, walnuts and other specialty crops.

* Suitable for non-UGMA commercial applications
* Automatic weighing
* Self-loading and self-unloading
* Automatic bulk density compensation
* Automatic temperature correction
* For over 450 grains and products

ITEM # GAC2500AGRI

GAC® 2500-AGRI On-Farm Elevator Accuracy

Designed for large acreage farmers, this grain analysis computer uses the newest analysis technology to provide repeatable results. Has more accurate temperature sensing capabilities to measure frozen and hot grain

* Utilizes 149MHz technology to provide elevator-like results
* Memory storage for up to 3,000 measurements

ITEM # GAC2700AGRI

GAC® 2700-AGRI On-Farm Elevator Accuracy

Provides Precise Results Measuring Grain Moisture and Test Weight. Large, Bright Color Touchscreen That is User-Friendly and Easy To Read. Provides Accurate Measurements For Both Frozen and Hot Grain. Store Up To 3,000 Sample Results. Multiple USB Ports For USB Devies, Printer, Software Upgrades and Peripherals.

* Hot Corn Calibration For Testing Right Out Of The Dryer
* Fast Sampling Results Without The Need of Charts or Pre-Weighing Grain

ITEM # GAC2500UGMAR

GAC® 2500-UGMA NTEP-CERTIFIED RESULTS

The next generation of moisture testers from the world-leader in grain moisture analyzers. In addition to being GIPSA-Certified as UGMA-Compatible, this unit offers accurate and reliable features.

* Easy to use, intuitive touchscreen
* Shorter analysis time
* Utilizes 149MHz technology to provide NTEP certified results
* Auto-run feature eliminates the need to touch the instrument during operation

ITEM # GAC2700UGMAR

GAC® 2700-UGMA *** NEW FOR 2021 ***

Utuilizies the latest analysis technology (149 MHz) to provide repeatable results. As well as incorporating forward-thinking security improvements, reduced measurement time, a new modern user-interface and reliable improvements

* Easy to use, intuitive touchscreen
* Shorter analysis time
* Utilizes 149MHz technology

ACCESSORIES FOR 2100 MOISTURE TESTERS

Description	Part #
GAC2100 ACC Pkg.	110290022
GAC2100 Printer, 110/230V	466780011
GAC 2100 Motor Assy. Cell	464221170S1
GAC 2100 (UL) PNL Bot Weldnut	467160171A
GAC2100 Assembly, 6Volt Power Adapter	467950190

ACCESSORIES FOR 2500 MOISTURE TESTERS

Description	Part #
Drawer	468071541
Printer, USB IL700	466780012
Grain Drawer w/out Bottom	DRAWEROPGAC2500
Clip, Trim Fastener	221190001
Foam Packing Insert-Top	468072030
Foam Packing Insert-Bottom	468072040

Shore
MEASURING SYSTEMS

SAMPLE RANGE FROM 22° - 160° F

SHORE MODEL 920

Provides quick accurate moisture results for a large variety of commodities. Results are displayed directly without the need for moisture or temperature conversion tables. The MODEL 920 uses a pre-weighed sample and a reliable sample-loading mechanism to ensure accurate, repeatable results. The MODEL 920 uses proven measurement principles and a cell design that makes it one of the most consistently accurate and economical moisture testers available. This means the MODEL 920 more closely matched the results of the moisture meters used by grain elevators than other portable testers.

The MODEL 920 features rugged all-metal construction with no flimsy plastic cases or other parts that are easily broken.

Complete portable testing package with a portable electronic scale and all accessories in a sturdy metal carrying case.

ITEM #: Shore920PKG

SHORE MODEL 930

Provides quick accurate moisture results for a large variety commodities. Results are displayed directly without the need for moisture or temperature conversion tables. The MODEL 930 uses a pre-weighed sample and a reliable sample-loading mechanism to ensure accurate, repeatable results. The 900 Series uses proven measurement principles and a design that makes it one of the most consistently accurate moisture testers available. This means the 900 Series more closely matched the results of the moisture meters used by grain elevators than other portable testers. The MODEL 930 features rugged all-metal construction with no flimsy plastic cases or other parts that are easily broken. The MODEL 930 is available as a complete portable package with all accessories in a rugged custom soft side case for storage and easy transport.

- Integrated scale for sample weighing and test weight
- User adjustable calibration bias for each grain

Runs on batteries or A/C adpater

ITEM #: Shore930PKG

Rotary Grain Cleaners

Cleaners Are Available
Assembled or Unassembled

MODEL	Y362	Y480	Y482
Drum Diameter	36"	48”	48”
Drum Length	73"	98”	98”
Total Length	97"	144”	144”
Width (outside tires)	55"	76”	76”
Motor Required	1HP	3HP	3HP
Drive	Belt	Belt	Belt
Capacity	700 bu/hr	1,900 bu/hr	1,900 bu/hr
Weight	493 lbs.	1020 lbs	1020 lbs
Trash Pan	n/a	optional	included
Intake Auger (optional)	6"	8”	8”

FEATURES

- Cleaning process includes an inner cone screen for large trash and an outer drum screen for fines
- Can be transported without removing the intake auger
- The trash pan on the 480 features a built-in auger
- Intake auger is hinged for easy setup and replacement

PRICING & OPTIONS

Farm King

DESCRIPTION	Model 362 ITEM #	Model 482 ITEM #
Cleaner w/ 1 Set of Screens, Tires, Motor & Assembly (No Auger)	Y362-COM	Y482-COM
Cleaner ONLY - No Screens, Motor or Assembly	Y362	Y482
Assembly Charge	Y362-ASSY	Y482-ASSY
1HP 1PH Motor	00118ES1RFD56-S	N/A
3HP 1PH Motor	N/A	00318ES1DFD184T-W22
Inside Cone Screen (see screen pages for options)	--	--
Outside Drum Screens (see screen pages for options)	--	--
Trash Pan	N/A	Included

AVAILABLE SCREENS

Farm King

PRODUCT	INSIDE CONE*	OUTSIDE DRUM*
Corn	Small - 2x 2 x 19ga. Standard - 5/8 x 5/8 x 17ga.	Standard - 4 x 4 x 23ga.
Wheat	Standard - 4 x 4 x 23ga. Large - 3 x 3 x 21ga.	Standard - 8 x 8 x 27ga. Large - 6 x 6 x 25ga.
Sunflower	Standard - 2 x 2 x 19ga. Large - 5/8 x 5/8 x 17ga.	Small - 8 x 8 x 27ga. Standard - 6 x 6 x 25ga. Large - 5 x 5 x 24ga.
Soybean	Small - 3 x 3 x 21ga. Standard - 2 x 2 x 19ga.	Small - 6 x 6 x 25ga. Standard - 5 x 5 x 24ga.
Milo	Standard - 4 x 4 x 23ga. Large - 3 x 3 x 21ga.	Standard - 8 x 8 x 27ga. Large - 6 x 6 x 25ga.
Flax	Small - 5 x 5 x 24ga. Standard - 4 x 4 x 23ga.	Standard - 10 x 10 x 29ga.
Optional Drum	10 x 10 x 29ga.	

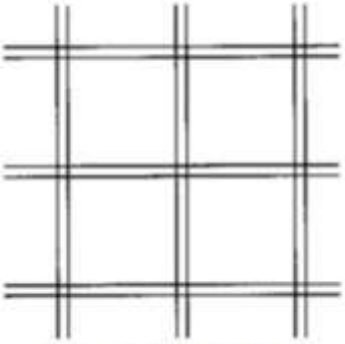
5/8 x 5/8 x 17 GA

2 x 2 x 19 GA

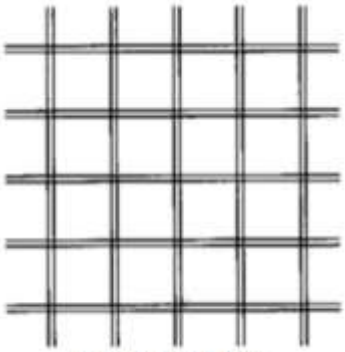
3 x 3 x 21 GA

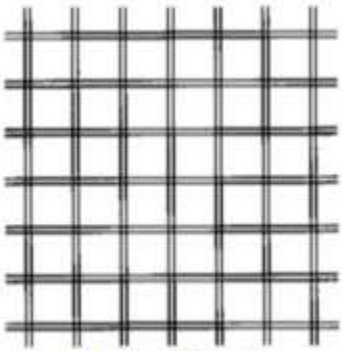
4 x 4 x 23 GA

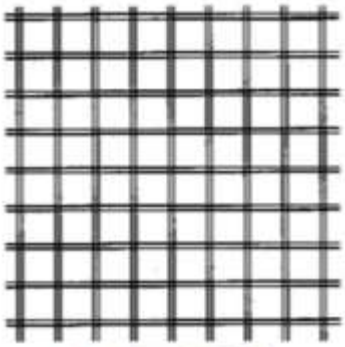
5 x 5 x 24 GA

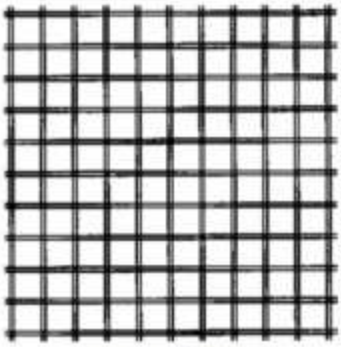
6 x 6 x 25 GA

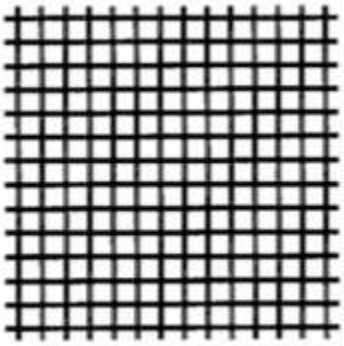
8 x 8 x 27 GA

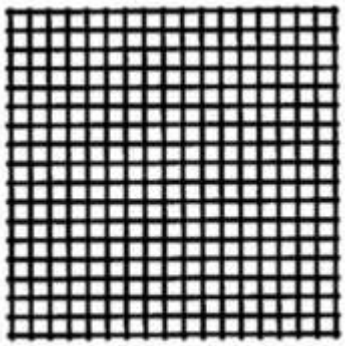
10 x 10 x 29 GA

SCREENS

Farm King

MODELS 360/362

Inside Cone		Outside Drum	
SCREEN SIZE	PART #	SCREEN SIZE	PART #
5/8 x 5/8 x 17ga.	F4310	4 x 4 x 23ga.	F4313
2 x 2 x 19ga. (2015 & Prev.)	F4309	5 x 5 x 27ga.	F4316
2 x 2 x 19ga. (2016+)	F2065	6 x 6 x 25ga.	F4315
3 x 3 x 21ga.	F4312	8 x 8 x 24ga.	F4314
4 x 4 x 23ga.	F4311	10 x 10 x 29ga.	F4317
5 x 5 x 24ga.	F4318		

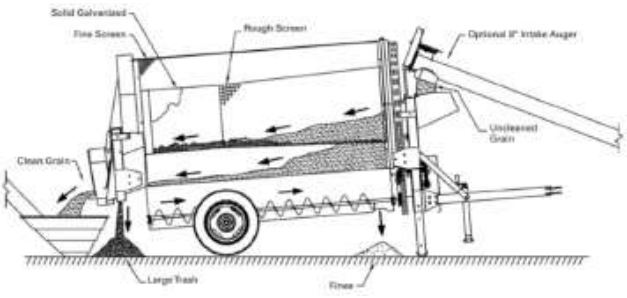

MODELS 480/482

Inside Cone		Outside Drum	
SCREEN SIZE	PART #	SCREEN SIZE	PART #
5/8 x 5/8 x 17ga.	F4512	4 x 4 x 23ga.	F4515
2 x 2 x 19ga. (2015 & Prev.)	F4511	5 x 5 x 27ga.	F4516
2 x 2 x 19ga. (2016+)	F2055	6 x 6 x 25ga.	F4517
3 x 3 x 21ga.	F4513	8 x 8 x 24ga.	F4518
4 x 4 x 23ga.	F4514	10 x 10 x 29ga.	F4519
5 x 5 x 24ga.	F4319		

BULK SCREENS

SCREEN SIZE (All Screens Are 36" Wide)	PART #
5/8" x 5/8" x 17ga.	Screen-GC 5/8x5/8
2 x 2 x .041	Screen-GC 2x2
3 x 3 x .032	Screen-GC 3x3
4 x 4 x .025	Screen-GC 4x4
5 x 5 x .023	Screen-GC 5x5
6 x 6 x .020	Screen-GC 6x6
8 x 8 x .028	Screen-GC 8x8
10 x 10 x .020	Screen-GC 10x10

Martin-Way Grain Cleaners

New Design

Improve the Quality of Your Crops!

3 HP Grain Cleaner

Up to 3,000 BPH
26" Tall x 12" Wide x 26" Long
Inlet: 8" x 8"
Outlet: 12" x 10"

1-PHASE -	MW-AC3-COM-1
3-PHASE -	MW-AC3-COM-3

10 HP Grain Cleaner

Up to 5,500 BPH
30" Tall x 24" Wide x 28" Long
Inlet: 6" x 24"
Outlet: 12" x 12"

1-PHASE -	MW-AC10-COM-1
3-PHASE -	MW-AC10-COM-3

Blower Fan

Venturi with Vacuum Adjustment

Air Box

Complete System Includes:

- Air Box
- Cyclone w/ Inlet
- Blower Housing w/ Blade
- Motor

*Piping & Bracing ***Not Included***

Old-Style Cleaner Replacement Parts (2023 and older)

OLD-STYLE 3HP CLEANER SYSTEM (Pre-2024) REPLACEMENT PARTS		
#	DESCRPTION	PART #
1	Cleaner Air Box	MW-AC3-AB
	Square Extender Tube	MW-AC3-Xtube
3	Motor Adapter Plate	MW-AC3-MAP
4	8" Round Transition	MW-AC3-Sq2Rd
5	Blower Housing	MW-AC3-BH
	Fan Blade	MW-AC3-FB
7	3HP Cyclone	MW-AC3-Cyc
8	3HP 1PH C-Face Motor	00336ES1E145TC-W22
9	Leg Support Kit (Not Included In Complete Systems)	MW-AC3-LSK
10	8" 14ga. Round Spouting	Spout-08/14-Rd/G-Ft

*OLD-STYLE * 7.5HP CLEANER SYSTEM REPLACEMENT PARTS		
#	DESCRPTION	PART #
1	Cleaner Air Box	MW-AC7.5-AB
	Square Extender Tube *(not shown)*	MW-AC7.5-Xtube
4	12" Round Transition	MW-AC7.5-Sq2Rd
5	Blower Housing	MW-AC7.5-BH
	Fan Blade *(not shonw)*	MW-AC7.5-FB
7	32" Cyclone	MW-AC7.5-Cyc
8	7.5HP 1PH C-Face Motor	00736ES1E213TC
9	Leg Support Kit (Not Included In Complete Systems)	MW-AC7.5-LSK
10	12" 12ga. Round Spouting	Spout-12/12-Rd/G-Ft

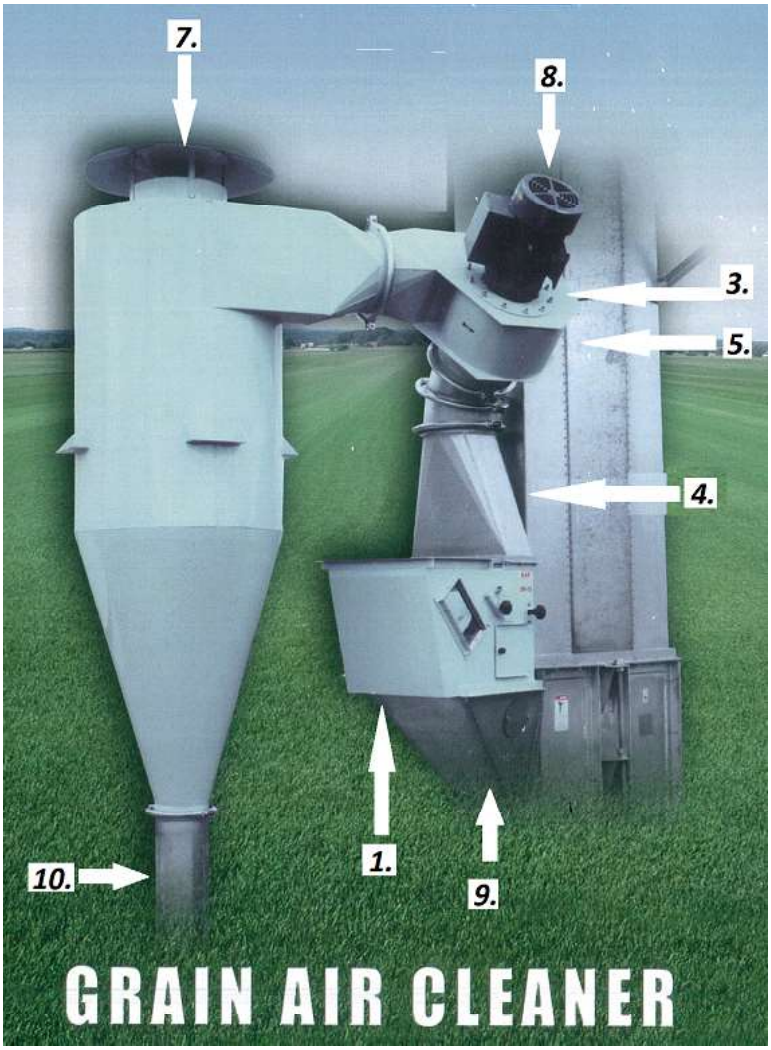

Introducing Master Mill MAX

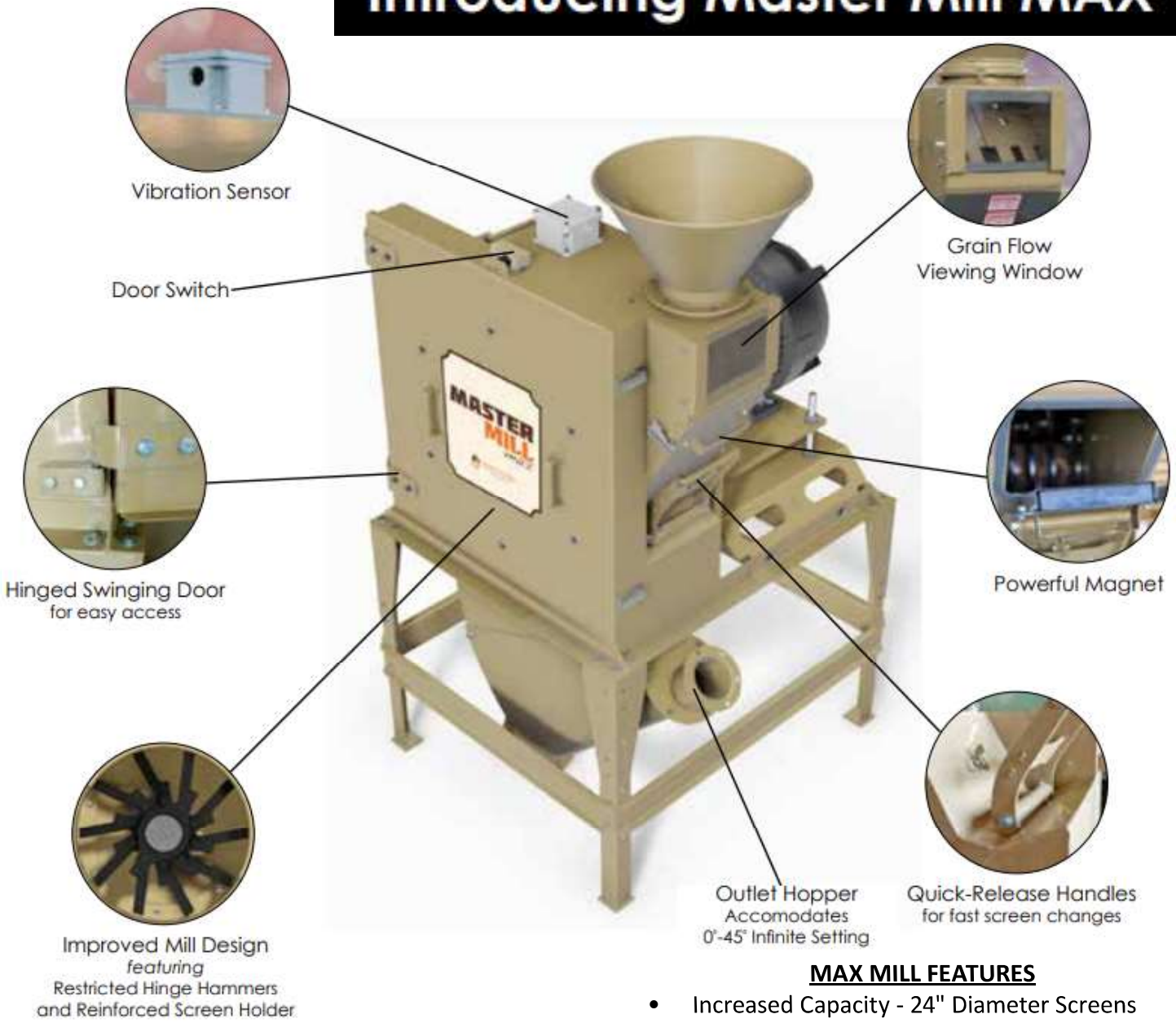

MAX MILL FEATURES

- Increased Capacity - 24" Diameter Screens
- Less Heat Build Up Minimizing Grain Temp
- Motor Options Up To 30HP
- Quick Release Screen For Fast Changes
- Screen Sizes From 1/8" to 1/2"
- Grain Flow Viewing Window
- Welded and Balance Milling Head
- Easy Access Magnet For Quick Cleaning
- Robust Welded Frame
- Adjustable Angle 0° to 45° Outlet Hopper

DIMENSIONS

Height (Including Stand) - 65"
Height w/ Intake Hopper - 72"
Width - 37"
Depth - 42"
Depth w/ Double Motors - 51"
Stand Height - 29"

Grinding Capacities at 1750 RPM

Note: Due to variations in grain moistures and texture the capacities listed are to be used as idelines only

Motor HP	Screen Size	Dry Corn LB./MN.	Dry Corn LB./HR.
10	3/32"	35	2100
10	3/16"	88	5280
10	1/4"	100	6000
10	3/8"	138	8280
15	3/32"	65	3900
15	1/8"	97	5820
15	3/16"	198	11880
15	1/4"	230	13800
15	3/8"	345	20700
20	3/32"	74	4440
20	1/8"	115	6900
20	3/16"	245	14700
20	1/4"	270	16200
20	3/8"	413	24780
30	3/32"	80	4800
30	1/8"	130	7800
30	3/16"	300	18000
30	1/4"	362	21720
30	3/8"	560	33600
3500 RPM			
10	3/32"	42	2520
10	1/8"	53	3180
10	3/16"	65	3900
10	1/4"	72	4320
10	5/16"	82	4920
10	3/8"	94	5640
15	3/32"	70	4200
15	1/8"	78	4680
15	3/16"	104	6240
15	1/4"	108	6480
20	3/32"	82	4920
20	1/8"	98	5880
20	3/16"	127	7620
20	1/4"	136	8160
30	3/32"	115	6900
30	1/8"	150	9000
30	3/16"	211	12660
30	1/4"	280	16800

24" MAX MILLS and MOTORS (more motors available)

24" Max Mill for 10 HP Motor (w/o Motor and Control Panel)	MST2410WOC
24' Max Mill for 15 HP Motor (w/o Motor and Control Panel)	MST2415WOC
24" Max Mill for 20 HP Motor (w/o Motor and Control Panel)	MST2420WOC
24" Max Mill for 30 HP Motor (w/o Motor and Control Panel)	MST2430WOC
10 HP, 1725 RPM, 1PH Motor	L3712T
10 HP, 3450 RPM, 1PH Motor	L3711T
10 HP, 3450 RPM, 3PH Motor	EM3711T
15 HP, 1725 RPM, 1PH Motor	L1177T
15 HP, 3525 RPM, 1PH Motor	39T044W965
20 HP, 1760 RPM, 3PH Motor	EM2334T
20 HP, 3450 RPM, 3PH Motor	EM4106T
30 HP, 1760 RPM, 3PH Motor	EM4104T
30 HP, 3520 RPM, 3PH Motor	EM4108T

Note: All mills include one screen, Additonal screens are available (see below)

MAX MILL CONTROL PANELS

Mill Panel, Single Switch, 10 HP 1 PH 230V	MPO
Mill Panel, Single Switch, 10 HP 3 PH 230V	MPO10
Mill Panel, Single Switch, Double – 10 HP 1PH	MPOD
Mill Panel, Single Switch, 15 HP 1 PH 230V	MPO151
Mill Panel, Single Switch, 15 HP 3 PH 230V	MPO153
Mill Panel, Single Switch, 20 HP 3 PH 230V	MPO20
Mill Panel, Single Switch, 30 HP 3 PH 230V	MPO30
Mill Panel, Triple Switch, 10 HP 1 PH 230V	MPB
Mill Panel, Double Switch (Intake), 10 HP 1 PH 230V	MPI
Mill Panel, Double Switch (Discharge), 10 HP 1 PH 230V	MPD

MAX MILL PARTS

1/16", 3/32", 1/8", 5/32", 3/16", 1/4", 5/16", 3/8", 1/2"	MAXSCREEN
Max Mill Screen Holder	MMSH24
Max Mill Door	MMD24
Max Mill Beater Hub (Hammers Not Included)	MAXHUB
.1495 Max Hammer (Set of 15)	MAXHAMMER-L
.1875 Max Hammer (set of 15)	MAXHAMMER-H
SK Tapered Bushing, 10 HP	SK-1-3/8
SK Tapered Bushing, 15 HP, 20 HP, 30 HP, 3450 RPM	SK-1-5/8
SK Tapered Bushing, 30 HP, 1760 RPM	SK-1-7/8
Vibration Sensor	200054

ACCESSORIES

Intake Funnel Hopper (16" to 6")	MMFH16
Adjustable Unload Boot	MMABOOT6
Unload Boot to 6" Flange Ring	MMDB6FLR
Unload Boot to 8” Flange Ring	MMDB8FLR
Unload Boot Reducer (6" to 4")	MMUR6x4
Adjustable Mill Stand	MMSTAND

18” HAMMER MILL CAPACITIES

Due to variations in grain moisture and texture the capacities listed below are to be used as a giude only

SCREEN SIZE	MOTOR	DRY CORN		Hi-MOISTURE CORN CORN		DRY BARLEY	
	HP	LB/MN	LB/HR	LB/MN	LB/HR	LB/MN	LB/HR
3/32”	7-1/2	30	1,800	N/A	N/A	N/A	N/A
	10	40	2,400	N/A	N/A	N/A	N/A
	15	60	3,600	N/A	N/A	N/A	N/A
	20	68	6,120	N/A	N/A	N/A	N/A
1/8”	7-1/2	60	3,600	N/A	N/A	18	1,080
	10	74	4,400	N/A	N/A	23	1,380
	15	94	5,600	N/A	N/A	35	2,100
	20	125.8	7,480	N/A	N/A	39.1	2,346
3/16”	7-1/2	81	4,840	71	4,240	30	1,800
	10	100	6,000	84	5,040	40	2,400
	15	147	8,800	126	7,520	58	3,480
	20	170	10,200	142.8	8,568	68	4,080
1/4”	7-1/2	100	6,000	95	5,680		
	10	119	7,120	115	6,880		
	15	178	10,640	167	10,000		
	20	202.3	12,104	195.5	11,696		
5/16”	7-1/2	126	7,520				
	10	147	8,800				
	15	220	13,200				
	20	249.9	14,960				
3/8”	7-1/2	146	8,720				
	10	172	10,320				
	15	258	15,480				
	20	292.4	17,544				
1/2”	7-1/2	187	11,200				
	10	226	13,520				
	15	334	20,000				
	20	348.2	22,984				

The Practical Approach To Grinding High Moisture and Dry Grains

FEATURES

- Low Initial Cost
- Low Maintenance
- Low Operating Cost
- Compact Design
- Easy Serviceability
- Heavy-Duty Plate Magnet
- Dust Tight Enclosure
- 360° Screen
- Reversible Hammer & Screens
- Removable Wear Plate
- Self Locking Door Latches

SPECIFICATIONS

- 15 Hardened Hammers On Beater Hubs
- 6" Screen Width
- 1/16" - 3/4" Screens Available
- 5-30 HP Motor Options
- Direct Drive
- 1,700-3,400 RPM Beater Hub
- 6" x 4" Magnet Plate

OPTIONS

- Gravity Discharge
- 0° - 40° Auger Discharge
- Discharge Funnel
- Support Stand
- Computerized
- Manual or Variable Speed

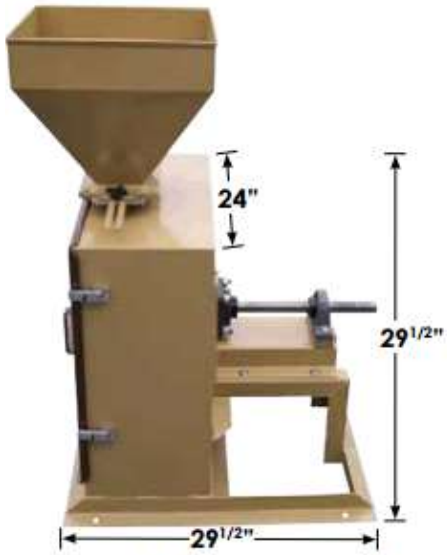

18" Mill shown with Jackshaft Assembly, Intake Hopper & Slide

ITEM #	18" HAMMER MILLS
MST18010	18" MasterMill w/ 10HP 1PH Motor & Control Panel
MST18210S	18" MasterMill w/ (2) 10HP 1PH Motors & Control Panel
MST18020	18" MasterMill w/ 20HP 3PH Motor & Control Panel
MST18010WOC	18" MasterMill w/ No Motor or Control Panel
MSTK0010	Jackshaft Assembly For 18" Mill

Note: All mills include a control panel w/ ammeter, contactor & 1 screen.

ITEM #	MOTORS
L3709T	7-1/2HP - 1PH - 3450 RPM
L3711T	10HP - 1PH - 3450 RPM
37H157W578G1	10HP - 1PH - 3520 RPM - DOUBLE SHAFT
EM3711T	10HP - 3PH - 3500 RPM
EM4106T	20HP - 3PH - 3520 RPM

ITEM #	ACCESSORIES		
AIH1212	Intake Hopper, 12" x 12"	(Does Not Include Slide)	6" High
AIH1616	Intake Hopper, 16" x 16"	(Does Not Include Slide)	14" High
AIH2424	Intake Hopper, 24" x 24"	(Does Not Include Slide)	24" High
AIT0406	6" Round Intake Adapter		4" High
AIS0406	Intake Slide, 4" x 6"		
AIH0004	Intake Auger Support Bracket, 4"	(Fits 16" and 24" Hoppers)	
AIH0006	Intake Auger Support Bracket, 6"	(Fits 16" and 24" Hoppers)	
AAD-0645	45º – 6" Unload Boot		
AAD-0640	40º – 6" Unload Boot		
AAD-0630	30º – 6" Unload Boot		
AAD-0620	20º – 6" Unload Boot		
AAD-0600	6" Horizontal Unload Boot Only		
AAD-1602	6" Horizontal to 6" Vertical Unload Boot		
ABR-0604	Mill Unload Boot Reducer, 6" to 4"		
ABR-0605	Mill Unload Boot Reducer, 6" to 5"		
AOH-1224	Outlet Hopper To 6" Round		
AST1800	18" Mill Stand	28-1/2"W x 29-1/2"D	13" - 21" High
AST1821	18" Mill Stand (For MST18210S Mill)	28-1/2"W x 53-1/2"D	13" - 21" High
ACS1011	Add-on For Control Box: 1 Switch & 1 Contactor (2HP or less)		
MST18HKR	Hinge Upgrade Kit For Master Mill Door *(specify left or right hinges)*		

45° Unload Boot

Outlet Hopper To 6" Round

Unload Boot Reducer

Intake Auger Support Bracket

Round Intake Adapter

6" Horizontal to 6" Vertical Unload Boot

SCREENS	
PART #	DESCRIPTION
92000208	1/16" D Screen 18 in.
92001071	**3/32" D Screen 18 in.**
92000209	7/64" D Screen 18 in.
92000221	1/8" D Screen 18 in.
92000211	5/32" D Screen 18 in.
92000212	3/16" D Screen 18 in.
92000213	7/32" D Screen 18 in.
92000214	1/4" D Screen 18 in.
92000215	5/16" D Screen 18 in.
92000216	3/8" D Screen 18 in.
92000217	7/16" D Screen 18 in.
92000218	1/2" D Screen 18 in.
92000219	5/8" D Screen 18 in.
92000220	3/4" D Screen 18 in.

See Next Page For Description & Pricing

HOPPERS	
PART #	DESCRIPTION
AIH2424	24" x24" Intake Hopper, 4" x 6"
AIH1616	**16" x 16" Intake Hopper, 4" x 6"**
AIH1212	12" x 12" Intake Hopper, 4" x 6"
AIS0406	Intake Slide, 4" x 6"

MOTORS	
PART #	DESCRIPTION
L3709T	7.5 HP 3450 RPM 1PH
L3711T	**10 HP 3450 RPM 1PH**
EM3711T	10 HP 3450 RPM 3PH
EM4106T	20 HP 3450 RPM 3PH
EM4108T	30 HP 3450 RPM 3PH

PART #	DESCRIPTION
PH18010	Mill Body (10hp)
PH18020	Mill Body (20hp)

PART #	DESCRIPTION
200052	Switch, Mill Door

UNLOAD BOOTS	
PART #	DESCRIPTION
AMB-0001	Mill Baffle Assy
Use Baffle Above or Optional Boot Below	
AAD-0600	0° Unload Boot, 6"
AAD-0620	20° Unload Boot, 6"
AAD-0630	30° Unload Boot, 6"
AAD-0640	40° Unload Boot, 6"
AAD-0645	45° Unload Boot, 6"

PART #	DESCRIPTION
17L01-1X2AA	Latch

PART #	DESCRIPTION
11195910	Back Plate, 18"

PART #	DESCRIPTION
PD18010	Mill Door

PART #	DESCRIPTION
6X4X1C8	Magnet
AMH-0604	Magnet Holder, SS

PART #	DESCRIPTION
AST1800	Stand, Standard Mill

Retracted: 13"

Fully Extended: 21"

Exploded View Of 10 HP Hammer Assembly #92000234

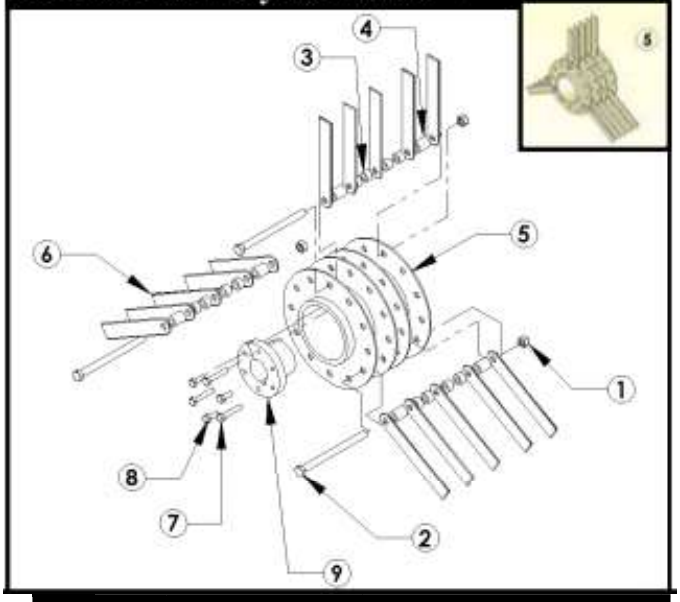

#	QTY	PART #	DESCRIPTION
5	1	92000234	Beater Hub Assy. (10HP)
-	3	18010HK	Complete Hammer Replacement Kit
1	3	66754500	D Nut
2	3	70011504	3/8" Hardened Hex Bolt
3	12	80013501	Spacer, Hammer (Short)
4	6	80013502	Spacer, Hammer (Long)
6	1	92000278	Hammers (Set of 15)
7	3	Bolt-1/4-20x1-1/2	Bolt, 1/4"-20 x 1 1/2"
8	3	Bolt-1/4-20x3/4	Bolt, 1/4"-20 x 3/4"
9	1	SD-1-3/8	Bushing

Exploded View Of 20 HP Hammer Assembly #10B251

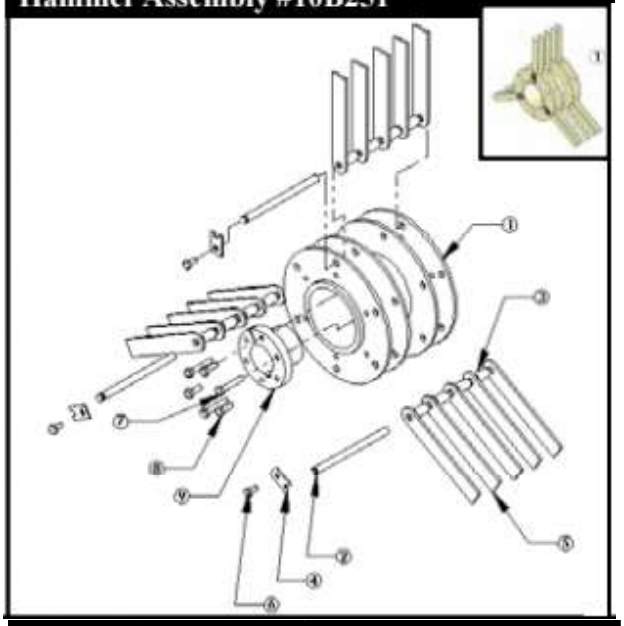

#	QTY	PART #	DESCRIPTION
1	1	10B251	Beater Hub Assy. (20HP)
-	3	18020HK	Complete Hammer Replacement Kit
2	3	2A1182	Pin, Hammer Assembly
3	12	2A1183	Spacer
4	3	2A1265	Clip, Pin Retainer
5	1	2A718	Hammers, HD (Set of 15)
6	3	67023412	Bolt, Grade 5 Fine Thread 1/4x1/2
7	3	Bolt-1/4-20x1-1/2	Bolt, Zinc 1/4-20x1-1/2
8	3	Bolt-1/4-20x3/4	Bolt, Zinc 1/4-20x3/4

HAMMER MILL CONTROL PANEL PARTS	
100-C60D10	Contactor, 10 HP @ 220V 1 PH, 120V Coil, 3 Pole
193-T1DC47	Overload, 24-50 Amp
100-C12D10	Contactor, 2 HP @ 220V, 1 PH, 120V Coil, 3 Pole
193-T1AC10	Overload, 7.2–10 Amp
193002	Amber Light, 120VAC Old Mill Panel
201014	2 Position Yellow Selector Switch, AB
205020	SPST Toggle Switch Old Mill Panel
191006	0-75 Ammeter 0-5 Amp Input
192006	Current Transformer 0-75

Contactors

Ammeter w/ Current Transformer

2-Pos. Selector Switch

COMPLETE HAMMER MILL CONTROL PANELS	
MPO	Mill Panel, Single Switch, 10 HP 1 PH 230V
MPO10	Mill Panel, Single Switch, 10 HP 3 PH 230V
MPOD	Mill Panel, Single Switch, Double – 10 HP 1PH
MPO20	Mill Panel, Single Switch, 20 HP 3 PH 230V
MPI	Mill Panel, Double Switch (Intake), 10 HP 1 PH 230V
MPD	Mill Panel, Double Switch (Discharge), 10 HP 1 PH 230V
MPB	Mill Panel, Triple Switch, 10 HP 1 PH 230V

MP0 Control Panel with Ammeter

18" HAMMER MILL PARTS	
18" Hammer Mill Screens, SEE PREVIOUS PAGE	
11195910	Back Plate, 18"
6X4X1C8	Magnet
AMH-0604	Magnet Holder, S.S.
17L01-1X2AA	Door Latch
200052	Safety Switch
AMB-0001	Mill Baffle

Mill Door Safety Switch

Mill Door Latch

DOUBLE 10 HAMMER MILL PARTS	
AST1821	18" Mill Stand for Dual 10 HP Motors
37H157W578G1	10 HP, 3450 RPM, 1 PH Double Shaft
AMG-00010	Guard, Double 10 Love Joy Coupling
3X710	Love Joy Coupler, 1-1/8" (L110)
3X712	Love Joy Coupler, 1-3/8" (L110)
3X715	Love Joy Buna N Spider (L110)

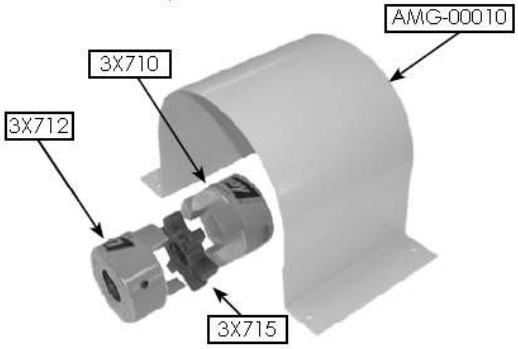

14" Mix-Mill Replacement Parts

14" HAMMER MILL (CX) PARTS	
10610300	Back Plate, 14"
93056701	1/16" Screen
93056716	1/8" Screen
Call For Additional Sizes Up To 1/2"	

14" HAMMER MILL (CX) BEATER HUB PARTS	
93000972	Beater Hub Assembly
92000278	15 Hammer Set, 1/8" Thick
70011508	3/8" Hardened Carriage Bolt
66754500	D Nut
80013503	Spacers (12 PCS.)
10688900	Hub Puller

FEED BLOWER

DESCRIPTION	MOTOR	PART #
HD Feed Blower (pipe, elbows, connecting bands sold separate)	7.5HP 1PH	MW-FB7.5-1
	7.5HP 3PH	MW-FB7.5-3
	15HP 3PH	MW-FB15-3
Feed Cyclone w/ 6" Inlet (Sold Separately)		MW-FBC
SILOTOP Zero Filter Model 7PDV (Flange Included. To Use In Place of Cyclone)		WamFilter
REPLACEMENT COMPONENTS		
Blower Housing (includes: motor mount, housing & discharge transition)		MW-FB-Housing
Cover For Blower Housing		MW-FB-Cover
Blower Blade		MW-FB-Blade

- **8" Inlet with 6" Outlet**
- **No Auger To Wear Auger Out**
- **Feed Will Be Cooler To Aide In Better Storage**
- **Creates Vacuum To Virtually Eliminate Dust Around The Mill**
- **Finer, More Consistant Product**
- **Increases Mill Capacity Up To 5%**

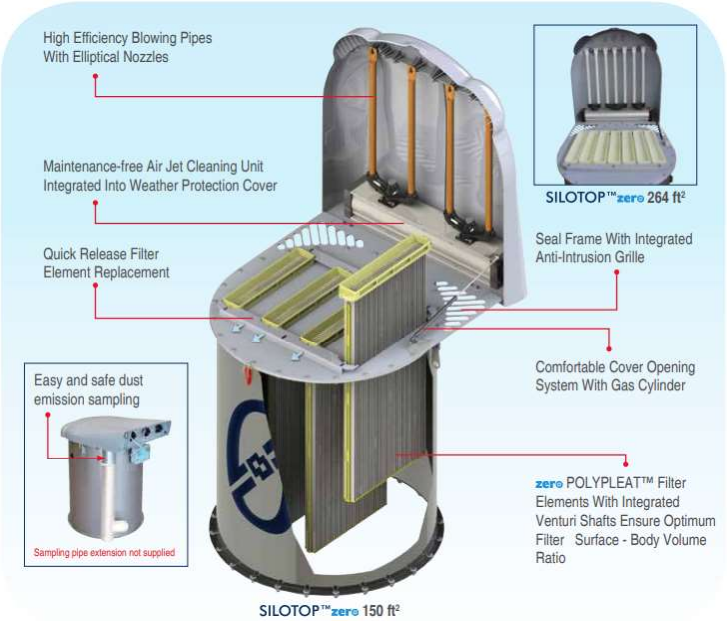

3 - FEED SYSTEMS

Bulk Feed Tanks	2-7
Bulk Feed Tank Accessories	8-9
Bulk Feed Tank Unloading Options	10-16
BFT Chain Agitators	17
Flex-Flo Systems	18-32

BULK FEED TANKS

Bulk Feed Tanks (BFT) are a popular way of storing feed due to their ease of installation, lower expansion cost and convenient hopper unloading. Several of these tanks can be installed to store a variety of grains and the sealed roof and body design helps protect grain/feed from moisture damage. GSI Bulk Feed Tanks are available in 6', 7', 9', 12' and 15' diameters and range in capacities up to 3,182 bushels (77 metric tons).

Only GSI feed tanks feature the exclusive, patented Auto-Lok ground control access system for opening, closing and latching the fill cap safely and easily from the ground. The cap swings open a full 180° to lie flat and parallel to the ground, completely eliminating interference with, or damage to, the cap from the auger.

Bulk Feed Tanks also feature an optional hopper valve for accessing small amounts of material to a location not serviced by the auger system.

WARNING!

GSI Bulk Feed Tanks are designed for the storage of free-flowing material only. Soybean meal, meat scraps and many other materials are not free-flowing and should only be stored in these tanks with proper agitation. Check with A.N. Martin Systems to determine what will work best for your intended use.

THE SOLID CHOICE

GSI precision formed, galvanized coated, high tensile steel sidewall sheet, combined with a 2-2/3" (68mm) wide by 1/2" (13mm) deep corrugation, provide outstanding strength and durability. Optional fully die-formed side ladders with dimpled non-skid rungs provide convenient access to the tank.

LEGS & ANCHORS

GSI tanks are supported by our fully galvanized, 6-bend roll-formed legs. GSI legs provide significantly greater strength over simple angle iron legs and greater corrosion resistance and longer life compared to painted legs. Galvanized roll-formed cross ties and two-piece leg anchor sections assist in transferring the tank load to the base and provide for greater strength, stability and support.

6' - 9' BULK FEED TANKS (BFT - 60 & 67 DEGREE HOPPERS)

- For storage of free flowing material having a maximum density of 40 lbs. per cubic foot
- Bushel capacities are calculated with no compaction and to full cubic foot capacities
- Weight capacities are calculated at 45 lbs. per cubic foot.

12' - 15' BULK FEED TANKS (BFT - 60 & 67 DEGREE HOPPERS)

- For storage of free flowing material having a maximum density of 45 lbs. per cubic foot
- Bushel capacities are calculated with 5% compaction and at a 27° angle of repose
- Weight capacties are calculated at 45 lbs. per cubic foot

HOPPER BOTTOMS

Hopper panels are die-formed with rounded corners and sealed edges down-turned for a weather-tight fit. In addition, assembly with rounded, truss-head bolts reduce "bridging" of contents on inner surfaces. The "eave" , the upper edge where the hopper is joined to the sidewall, is specially die-formed to conform to the shape of the sidewall corrugation.

DRIP LIP FOR WEATHER PROTECTION

GSI's drip lip water deflection system is a one-a-kind, roll formed bottom sheet edge which forces water away from the hopper and lower boot area. Complete weather protection without a loss in capacity.

Without Drip Lip

With Drip Lip

FEED TANK DIMENSION

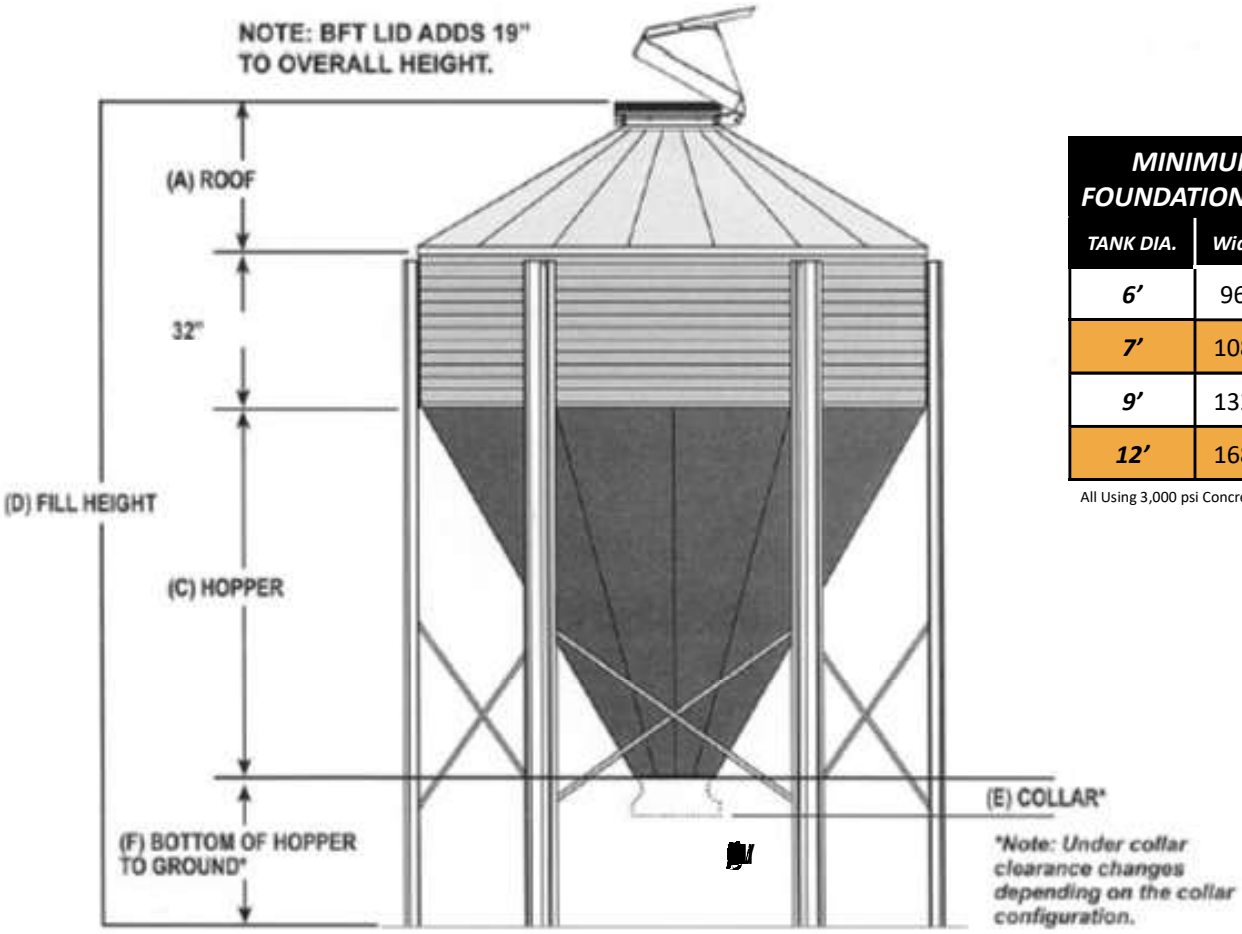

MINIMUM CONCRETE FOUNDATION REQUIREMENTS			
TANK DIA.	Width	Length	Depth
6'	96"	96"	13"
7'	108"	108"	13"
9'	132"	132"	14"
12'	168"	168"	15"

All Using 3,000 psi Concrete w/ 6" x 6" Wire Mesh

BIN SIZE	(A) ROOF HEIGHT		(C) ROOF HEIGHT	(E) COLLAR HEIGHT	(F) HOPPER TO GROUND HEIGHT
	30° Roof	40° Roof			
6' 60° w/ 16" Opening	20-7/16"	26-1/2"	48-5/16"	4-9/16"	28-5/16"
6' 60° w/ 22" Opening	20-7/16"	26-1/2"	43-3/4"	3"	32-7/8"
7' 67° w/ 16" Opening	23-7/8"	31-1/4"	77-1/2"	6-1/8"	30-3/8"
7' 67° w/ 22" Opening	23-7/8"	31-1/4"	71-3/8"	3"	36-1/2"
9' 60° w/ 16" Opening	30-15/16"	41-5/16"	79-13/16"	4-9/16"	28-1/16"
9' 60° w/ 22" Opening	30-15/16"	41-5/16"	75-1/4"	3"	32-5/8"
12' 60° w/ 16" Opening	41-1/8"	56-5/16"	111-5/16"	4-9/16"	31-3/16"
12' 60° w/ 22" Opening	41-1/8"	56-5/16"	106-3/4"	3"	35-3/4"
15' 60° w/ 16" Opening	51-7/16"	71-5/16"	141-9/16"	4-9/16"	33"
15' 60° w/ 22" Opening	51-7/16"	71-5/16"	137"	3"	37-9/16"

(D) FILL HEIGHT												
	1 RING		2 RING		3 RING		4 RING		5 RING		6 RING	
BIN SIZE	30° Roof	40° Roof	30° Roof	40° Roof	30° Roof	40° Roof	30° Roof	40° Roof	30° Roof	40° Roof	30° Roof	40° Roof
6' 60°	129-1/16"	135-1/8"	161-1/16"	167-1/8"	193-1/16"	199-1/8"	255-1/16"	231-1/8"	N/A	N/A	N/A	N/A
7' 67°	163-3/4"	171-1/8"	195-3/4"	203-1/8"	227-3/4"	235-1/8"	259-3/4"	267-1/8"	291-3/4"	299-1/8"	323-3/4"	331-1/8"
9' 60°	170-11/16"	181-1/16"	202-11-16"	213-1/16"	234-11/16"	245-1/116"	266-11/16"	277-1/16"	298-11/16"	309-1/16"	330-11/16"	341-1/16"
12' 60°	N/A	N/A	247-5/8"	262-13/16"	279-5/8"	294-13/16"	311-5/8"	326-13/16"	343-5/8"	358-13/16"	375-5/8"	390-13/16"
15' 60°	N/A	N/A	290"	309-7/8"	322"	341-7/8"	354"	373-7/8"	386"	405-7/8"	N/A	N/A

FEED BIN SPECS

ITEM #				MAXIMUM CAPACITY				OVERALL HEIGHT	
MODEL	DIA.	# of RINGS	HOPPER ANGLE	BUSHEL	CUBIC FT.	METRIC TONS	US TONS	FEET	METERS
BFT	6'	1	60°	111	137.99	2.50	2.76	10' 7"	3.25
		2		171	212.60	3.86	4.25	13' 3"	4.06
		3		231	287.20	5.21	5.74	15' 10"	4.85
		4		291	361.80	6.56	7.24	18' 7"	5.69
BFT	7'	1	67°	185	230.09	4.17	4.60	13' 6"	4.12
		2		266	331.63	6.02	6.63	16' 2"	4.93
		3		348	433.17	7.85	8.66	18' 9"	5.75
		4		430	534.72	9.70	10.69	21' 6"	6.56
		5		511	636.26	11.54	12.73	24' 2"	7.37
		6		593	737.81	13.39	14.76	26' 10"	8.18
BFT	9'	1	60°	308	383.88	6.96	7.69	14' 1"	4.30
		2		443	551.75	10.01	11.04	16' 9"	5.11
		3		578	719.62	13.06	14.39	19' 5"	5.92
		4		713	887.48	16.10	17.75	22' 1"	6.74
		5		848	1055.34	19.15	21.11	24' 8"	7.55
		6		983	1223.21	22.19	24.46	27' 5"	8.36
BFT	12'	2	60°	923	1109.27	22.64	24.96	20' 6"	6.25
		3		1175	1407.69	28.73	31.67	23' 2"	7.06
		4		1427	1706.12	34.82	38.39	25' 10"	7.87
		5		1679	2004.54	40.91	45.10	28' 6"	8.69
		6		1931	2302.96	47.00	51.82	31' 2"	9.50
		7		2184	2602.24	53.12	58.56	33' 10"	10.31
BFT	15'	2	60°	1608	1934.95	39.49	43.54	23' 11"	7.29
		3		2001	2401.22	49.00	54.03	26' 7"	8.10
		4		2395	2867.50	58.52	64.52	29' 3"	8.92
		5		2788	3333.77	68.04	75.01	31' 11"	9.73
		6		3182	3800.04	77.55	85.50	34' 7"	10.54

ALL FEED TANKS INCLUDE:

- Ground Control Fill Cap
- Roof Panels
- 2.66" Corrugated Sidewalls
- 16" or 22" Hopper Opening

NOTES:

- All Tanks With Roof Eave Heights of 20' or Higher Require Ladder & Safety Cage
- OSHA Approved Ladder & Safety Cage Available And Recommended For All Bins

LADDER & SAFETY CAGES

30° ROOF

TANK	PART #	LBS.
6' 60° 1 Ring	BLK-13201	127
6' 60° 2 Ring	BLK-13202	141
6' 60° 3 Ring	BLK-13203	166
6' 60° 4 Ring	BLK-13204	195
7' 67° 1 Ring	BLK-13205	147
7' 67° 2 Ring	BLK-13206	171
7' 67° 3 Ring	BLK-13207	201
7' 67° 4 Ring	BLK-13208	215
7' 67° 5 Ring	BLK-13156	239
7' 67° 6 Ring	BLK-13198	269
9' 60° 1 Ring	BLK-13209	149
9' 60° 2 Ring	BLK-13210	173
9' 60° 3 Ring	BLK-13211	202
9' 60° 4 Ring	BLK-13212	217
9' 60° 5 Ring	BLK-13161	241
9' 60° 6 Ring	BLK-13162	273
12' 60° 2 Ring	BLK-13213	215
12' 60° 3 Ring	BLK-13214	230
12' 60°4 Ring	BLK-13165	258
12' 60° 5 Ring	BLK-13166	286
12' 60° 6 Ring	BLK-13167	297
15' 60° 2 Ring	BLK-13215	234
15' 60° 3 Ring	BLK-13169	263
15' 60° 4 Ring	BLK-13170	290
15' 60° 5 Ring	BLK-13171	301

40° ROOF

TANK	PART #	LBS.
6' 60° 1 Ring	BLK-13201F	127
6' 60° 2 Ring	BLK-13202F	142
6' 60° 3 Ring	BLK-13203F	166
6' 60° 4 Ring	BLK-13204F	195
7' 67° 1 Ring	BLK-13205F	148
7' 67° 2 Ring	BLK-13206F	172
7' 67° 3 Ring	BLK-13207F	201
7' 67° 4 Ring	BLK-13208F	216
7' 67° 5 Ring	BLK-13156F	240
7' 67° 6 Ring	BLK-13198F	270
9' 60° 1 Ring	BLK-13209F	153
9' 60° 2 Ring	BLK-13210F	177
9' 60° 3 Ring	BLK-13211F	207
9' 60° 4 Ring	BLK-13212F	221
9' 60° 5 Ring	BLK-13161F	246
9' 60° 6 Ring	BLK-13162F	277
12' 60° 2 Ring	BLK-13213F	220
12' 60° 3 Ring	BLK-13214F	235
12' 60°4 Ring	BLK-13165F	263
12' 60° 5 Ring	BLK-13166F	290
12' 60° 6 Ring	BLK-13167F	302
15' 60° 2 Ring	BLK-13215F	238
15' 60° 3 Ring	BLK-13169F	266
15' 60° 4 Ring	BLK-13170F	294

LADDER & CAGE REPLACEMENT PARTS

PART #	DESCRIPTION
2FOOTRFBFT	Ladder, 2' Roll Formed BTA
3FOOTRFBFT	Ladder, 3' Roll Formed BTA
4FOOTRFBFT	Ladder, 4' Roll Formed BTA
5FOOTRFBFT	Ladder, 5' Roll Formed BTA
6FOOTRFBFT	Ladder, 6' Roll Formed BTA
7FOOTRFBFT	Ladder, 7' Roll Formed BTA
8FOOTRFBFT	Ladder, 8' Roll Formed BTA
9FOOTRFBFT	Ladder, 9' Roll Formed BTA

PART #	DESCRIPTION
LDR-4411	Roll Formed Ladder Rung
LS-7030	Roll Formed Ladder Top Section (no plate, no bracket)
LDR-4320	Outside Standoff Brackets (Bag of 10)
LS-6774	24" Bell Safety Cage Package
LS-6773	48" Bell Safety Cage Package
LS-6772	4' Safety Cage Extension Package
LDR-5445	Ladder Security Door

Ladder Packages with Safety Cages

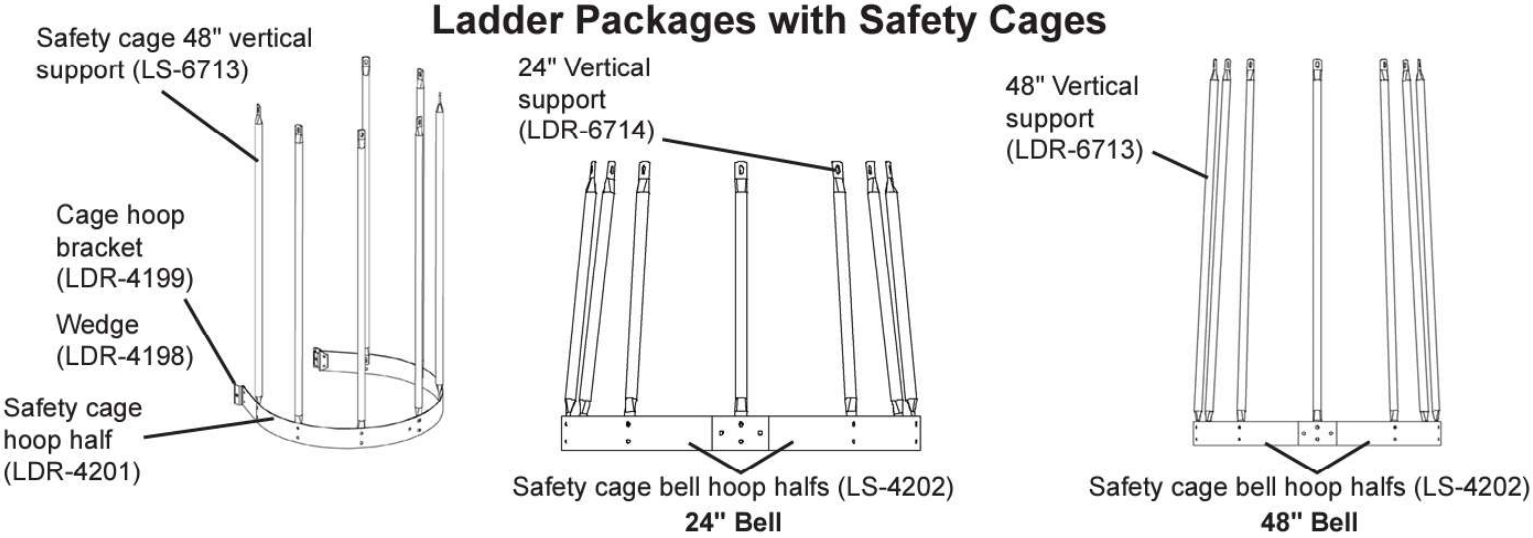

PART #	DESCRIPTION
6' 60° 1-Ring	BLK-13201-G2
6' 60° 2-Ring	BLK-13202-G2
6' 60° 3-Ring	BLK-13203-G2
6' 60° 4-Ring	BLK-13204-G2
7' 67° 1-Ring	BLK-13205-G2
7' 67° 2-Ring	BLK-13206-G2
7' 67° 3-Ring	BLK-13207-G2
7' 67° 4-Ring	BLK-13208-G2
7' 67° 5-Ring	BLK-13156-G2
7' 67° 6-Ring	BLK-13198-G2
9' 60° 1-Ring	BLK-13209-G2
9' 60° 2-Ring	BLK-13210-G2
9' 60° 3-Ring	BLK-13211-G2

Ladder & Safety Cage Packages for 30° & 40° Roofs

PART #	DESCRIPTION
9' 60° 4-Ring	BLK-13212-G2
9' 60° 5-Ring	BLK-13161-G2
9' 60° 6-Ring	BLK-13162-G2
12' 60° 2-Ring	BLK-13213-G2
12' 60° 3-Ring	BLK-13214-G2
12' 60° 4-Ring	BLK-13165-G2
12' 60° 5-Ring	BLK-13166-G2
12' 60° 6-Ring	BLK-13167-G2
15' 60° 2-Ring	BLK-13215-G2
15' 60° 3-Ring	BLK-13169-G2
15' 60° 4-Ring	BLK-13170-G2
15' 60° 5-Ring	BLK-13171-G2

NOTE: All tanks with an eave height over 24' require fall protection. Safety Cages are no longer OSHA approved for fall protection.

Pneumatic Fill Kits

* Fill kits include fill and exhaust elbows to get over the edge of the bin from the roof.
Kit does not include vertical fill or exhaust pipe, tube clamps or pipe collar

ITEM #	DESCRIPTION
BLK-13334	6' Dia. Feed Hopper Bin Pneumatic Fill Kit - 30° Roof, Rotomold Lid
BLK-13335	7' Dia. Feed Hopper Bin Pneumatic Fill Kit - 30° Roof, Rotomold Lid
BLK-13336	9' Dia. Feed Hopper Bin Pneumatic Fill Kit - 30° Roof, Rotomold Lid
BLK-13337	12' Dia. Feed Hopper Bin Pneumatic Fill Kit - 30° Roof, Rotomold Lid
BLK-13338	15' Dia. Feed Hopper Bin Pneumatic Fill Kit - 30° Roof, Rotomold Lid
BLK-13339	6' Dia. Feed Hopper Bin Pneumatic Fill Kit - 40° Roof, Rotomold Lid
BLK-13340	7' Dia. Feed Hopper Bin Pneumatic Fill Kit - 40° Roof, Rotomold Lid
BLK-13341	9' Dia. Feed Hopper Bin Pneumatic Fill Kit - 40° Roof, Rotomold Lid
BLK-13342	12' Dia. Feed Hopper Bin Pneumatic Fill Kit - 40° Roof, Rotomold Lid
BLK-11171	10' Section Pneumatic Vertical Fill Tube
BLK-11172	20' Section Pneumatic Vertical Fill Tube
BLK-11221	4" Pneumatic Pipe Clamp Kit
BLK-11222	6" Pneumatic Pipe Clamp Kit
GC08167	10' x 6" Exhaust Pipe, 14ga.
GC08168	15' x 6" Exhaust Pipe, 14ga.
GC08169	20' x 6" Exhaust Pipe, 15ga.

PNEUMATIC FILL REPLACEMENT PARTS	
PART #	DESCRIPTION
BLK-10060	4" Fill Elbow For 30° Roof
BLK-10060F	4" Fill Elbow For 40° Roof
BLK-10201	4" 90° Elbow Fill Cap
BLK-10117	6" Adjustable Exhaust Elbow
BLK-10202	6" Exhaust Elbow w/ Flange

FEED BIN LIDS

Feed Bin Lids

- Available for 30° and 40° Roof Profiles
- Simple Clamp-Band Installation Of Lid Assembly Peak Ring Allows For 360° Mounting
- Internal Magnet Adds Additional Force To Keep Lid Closed

PART #	DESCRIPTION
BLK-13102	BFT Lid Without Peak Ring For Retrofit (For 20" O.D.), Peak Ring Not Included
BLK-13216	BFT Lid Assembly, Large (For 22.5" O.D.), Peak Ring Not Included
BLK-13080	BFT Lid with 30° Peak Ring and Hardware
BLK-13101	BFT Lid with 40° Peak Ring and Hardware
BLK-13463	BFT Lid Snow Guard Kit
BLK-11651B	BFT/GHT Roof Lid w/ Ground Control

NOTES:
All packages are for sealed roof only (not grain bin roofs)

Brock Feed Bin Spring-Lock® Lid

- Positive, Spring-Aided Closing Action That Resists Wind And Helps Keep Rain And Snow Out
- Easily Adjusted to Open In Almost Any Direction
- Operated From Ground Level Or Locations Away From The Bin

ITEM #:3-37335
DESCRIPTION: Brock Spring-Lock® Lid
PRICE: $387.76 w/out Collar ($440.64 w/ Collar - Part # 3-37180)

RETROFIT GROUND CONTROL

STEP 1: Determine Your Tank Diameter & Hopper Angle Across The Top Of The Chart Below
STEP 2: Follow The Column Down To The Number Rings On Your Bin
STEP 3: Follow That Row To The Right To Determine The Correct Package

TANK DIAMTER						
6' 60°	7' 67°	9' 60°	12' 60°	15' 60°	DESCRIPTION	ITEM #
1					10' Chain Package	BLK-11495
2,3	1,2				15' Chain Package	BLK-11496
4	3,4	2,3			20' Chain Package	BLK-10787
	5	4,5	2,3		25' Chain Package	BLK-11497
	6	6	4,5		30' Chain Package	BLK-10789
			6		35' Chain Package	BLK-11498
				2,3,4,5,6	40' Chain Package	BLK-10535

FEED BIN ACCESSORIES

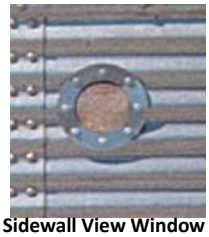
Sidewall View Window

Hopper View Window

PART #	DESCRIPTION
BLK-10930	2.66" Sidewall View Window
BLK-10216	Hopper View Window Kit
BLK-11879	Hopper Valve Assembly for 6'-9' BFT's
BLK-11884	15° Wedge For Unloaders
BLK-12789	Complete 6' 60° E-Z Kleenout Hopper Panel Kit
BLK-12790	Complete 7' 67° E-Z Kleenout Hopper Panel Kit
BLK-12791	Complete 9' 60° E-Z Kleenout Hopper Panel Kit
FLX-4854	Sure-Flo Assembly - 16" Hopper Opening
FLX-5035	Sure-Flo Assembly - 22" Hopper Opening
BLK-10194	6' & 7' Dia. Anchor Bolt Kit
BLK-10195	9' Dia. Anchor Bolt Kit
BLK-10196	12' Dia. Anchor Bolt Kit
BLK-10855	15' Dia. Anchor Bolt Kit
BLK-13463	BFT Lid Snow Guard Kit (only compatible wtih BLK-13102, BLK-13080 and BLK-13101

Kleenout Panel

Hopper Valve Assembly

FEED BIN AERATION KIT

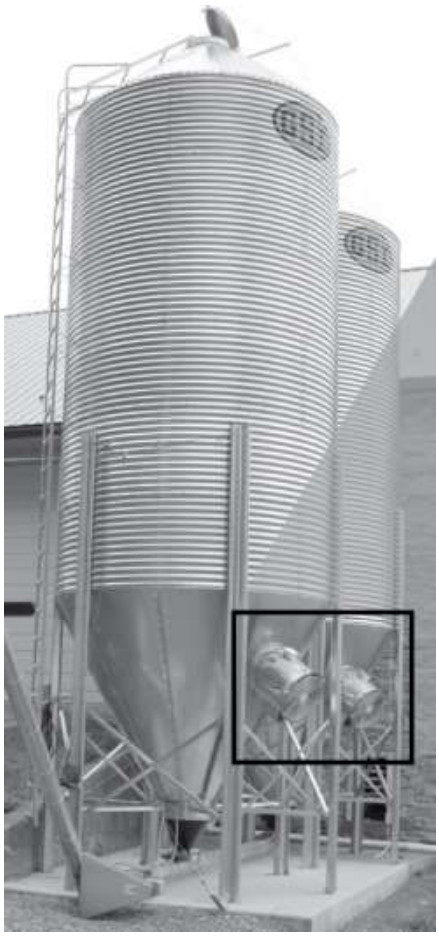

PART #	DESCRIPTION
AAA-00012	Aeration 12" Face Plate
D3711	Axial Fan, 12" - 1HP - 1PH - 230V
AAA-00014	Aeration 14" Face Plate
D3721	Axial Fan, 12" - 1.5HP - 1PH - 230V
AAA-00018	Aeration 18" Face Plate (Double Flange Ring)
D3741	Axial Fan, 18" - 3HP - 1PH - 230V

INSIDE VIEW

Peforated Plenum

OUTSIDE VIEW

With 18" Double Flange Ring

With Fan & Faceplate

Flow Hammer

	PART #	DESCRIPTION
Order one of each per tank	FLX-5195LMB	Flow Hammer and Control, 1/8 HP, 1 PH, 230V
	INT-4812	Flow Hammer Control Mounting Bracket
Order one per tank based on tank manufacturer	FLX-5187A	Flow Hammer Chain Mounting Bracket for AP/Choretime Tank
	FLX-5187S	Flow Hammer Chain Mounting Bracket for Schuld/Bushnell Tank
	FLX-5187V	Flow Hammer Chain Mounting Bracket for Valco/Pax Tank
	FLX-5187-22	Flow Hammer Mounting Bracket for Tank with 22" Collar
Order one per flex line if using timer mode*	AP-3775	Relay Box, 230V w/Encloser
Order one per unloader if using proximity sensor	FLX-5207	Proximity Switch and Mounting Bracket Kit (2 required per FLX-4869 Pant-Leg Boot)

*Required if flex line control units do not have available dry contacts for signal wire.
Timer Mode: Flow Hammer operates when flex line runs.
Proximity Mode: Flow Hammer operates when the proximity switch does not sense feed in the boot

Flow Hammer and Control Unit Parts

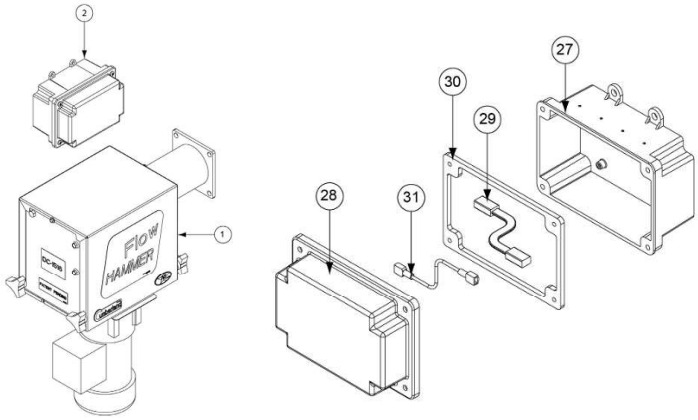

REF #	PART #	DESCRIPTION
1	FLX-5185A	Power Unit Assembly
2	FLX-5194	Flow Hammer Control Unit
27	FLX-5194B	Flow Hammer Control Base w/ PC
28	FLX-5194T	Flow Hammer Control Lid w/ PC
29	FLX-5001	Cable, IR Sensor Connector
30	FLX-4561	4 x 6 Electrical Box Gasket
31	E105-1024	Wire Kit for FLX-5350 Switch

Flow Hammer Parts

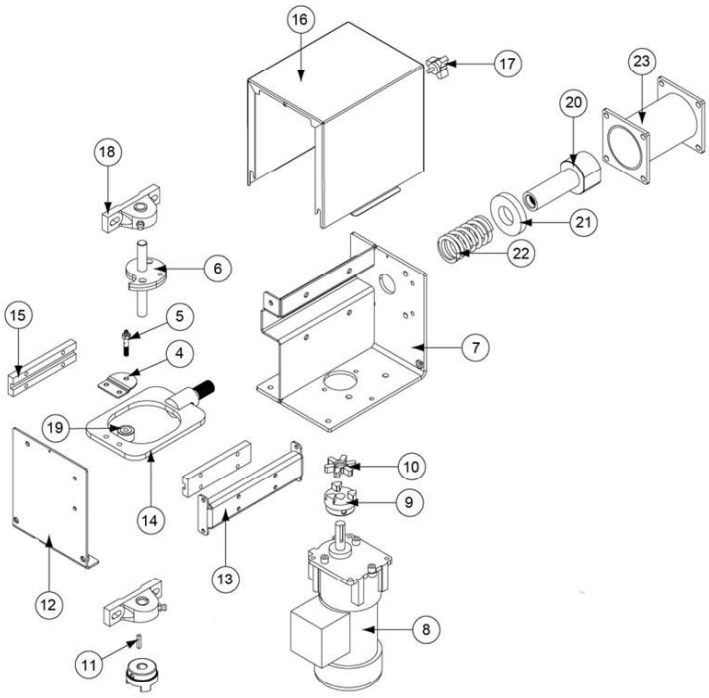

REF #	PART #	DESCRIPTION
4	FLX-5174	Bearing Holder Bracket
5	S-10194	Lube Bolt, HHCS 5/16"-18 x 1-1/2" ZN Grade 5
6	FLX-5179	Cam and Shaft Assembly
7	FLX-5190A-RD	Hammer Frame - Painted
8	FLX-5193	Feed Flow Hammer Motor, 230V, 50/60 Hz
9	50-0009	Coupler, LO95 x 5/8 Lovejoy
10	52-0012	Spider Hytrel for LO95 Lovejoy
11	S-8426	Square Key 3/16" x 1" Long
12	FLX-5182A-RD	End Plate Bracket - Painted
13	FLX-5181-RD	Wear Guide Support Bracket - Painted
14	FLX-5189A	Cam Follower and Bushing Assembly
15	FLX-5180	Nylon Wear Guide for Cam Follower
16	FLX-5184A-RD	Hammer Cover - Painted
17	S-8006	Knob, 1/4"-20 x 1/2" SS Stud
18	FLX-5178	5/8" Pillow Block Bearing
19	FLX-5177	Flat Sealed Track Roller
20	FLX-5163	Hammer Shaft
21	FLX-5164	Wear Ring for Feed Flow Hammer
22	FLX-5136	Spring, Compression
23	FLX-51660-RD	Tube Assembly - Painted

16" UNLOADING ACCESSORIES

BULK FEED TANK HOPPER

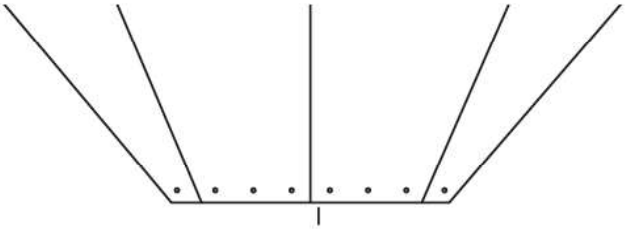

VERTICAL SPACE REQUIRED FOR HOPPER COLLAR
45° (2-9/16")
60° (4-9/16")
67° (6-1/8")

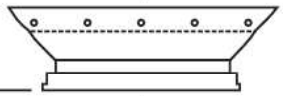

22" TO 16" 45° HOPPER EXTENSION PANEL & COLLAR (**BLK-10847**) (USED ON 22" HOPPERS ONLY)
22" TO 16" 60° HOPPER EXTENSION PANEL & COLLAR (**BLK-10587**) (USED ON 22" HOPPERS ONLY)
22" TO 16" 67° HOPPER EXTENSION PANEL & COLLAR (**BLK-10591**) (USED ON 22" HOPPERS ONLY)

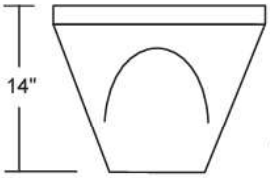

STRAIGHT PLASTIC BOOT
(**FLX-2195**)
(**FLX-2195-C**)
(**FLX-2195-T**)

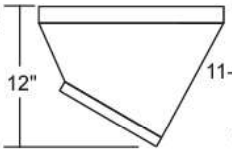

30° PLASTIC BOOT
(**FLX-2194**)
(**FLX-2194-C**)
(**FLX-2194-T**)

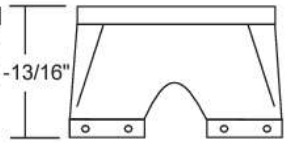

DOUBLE STRAIGHT PLASTIC BOOT
(**FLX-4869**)

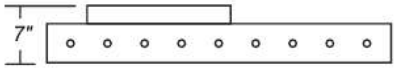

16" ROLLER VALVE..... (**BLK-11614**)
16" RACK & PINION VALVE W/CHAIN WHEEL..... (**BLK-11616**)
16" RACK & PINION VALVE W/HANDWHEEL..... (**BLK-11615**)
16" SLIDE VALVE..... (**BLK-11638**)

PART #	DESCRIPTION
AAW-00103	3° Boot Wedge
AAW-00106	6° Boot Wedge
AAW-00109	9° Boot Wedge
AAW-00112	12° Boot Wedge
AAW-00115	15° Boot Wedge
AAW-00120	20° Boot Wedge

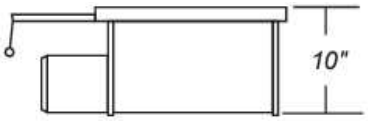

PART #	DESCRIPTION
RA-3036	4" Rigid Unloader w/ Bearing
RA-3037	6" Rigid Unloader w/ Bearing & 13/16" ID Auger Shaft (Old)
RA-30371	6" Rigid Unloader w/ Bearing & 1" ID Auger Shaft (New)
MW-RU-08(GSI)	8" Rigid Unloader w/ Bearing

UNLOAD OPTIONS

HOPPER EXTENSION PANELS	PART #
60° Hopper Extensions (25" to 16") Set of 3	AAE-00600
60° Hopper Extensions (30" to 16") Set of 3	AAE-00601
60° Hopper Extensions (36" to 16") Set of 3	AAE-00602
67° Hopper Extensions (25" to 16") Set of 3	AAE-00670
67° Hopper Extensions (30" to 16") Set of 3	AAE-00671
67° Hopper Extensions (36" to 16") Set of 3	AAE-00672

16" COLLARS	PART #
16” 60° Collar (24 Holes)	BLK-10489
16” 60° Collar (18 Holes)	BLK-12342
16” 67° Collar (24 Holes)	BLK-10488
16” 60° Hopper Collar (27 Holes)	BLK-11463

SLIDE GATES	PART #
16” Roller Valve	BLK-11614
16” Rack & Pinion Valve w/ Chain Wheel	BLK-11616
16” Rack & Pinion Valve w/ Hand Wheel	BLK-11615
16” Hand Slide Valve	BLK-11638

PLASTIC BOOT	PART #
16” Straight Plastic Boot	FLX-2195
Hardware Package	FLX-2196

PLASTIC BOOT	PART #
16” 30° Plastic Boot	FLX-2194
Hardware Package	FLX-2196

PLASTIC BOOT	PART #
16” Twin Straight Plastic Boot	FLX-4869
Hardware Package	FLX-2196

BOOT WEDGES	PART #
Boot Wedge, 3°	AAW-00103
Boot Wedge, 6°	AAW-00106
Boot Wedge, 9°	AAW-00109
Boot Wedge, 12°	AAW-00112
Boot Wedge, 15°	AAW-00115
Boot Wedge, 20°	AAW-00120

RIGID AUGER UNLOADER	PART #
4” Rigid Unloader w/ Stub Shaft & Bearing	RA-3036
6” Rigid Unloader w/ Stub Shaft & Bearing	RA-30371
8" Rigid Unloader w/ Stub Shaft & Bearing	MW-RU-08(GSI)

22" Unloading Accessories

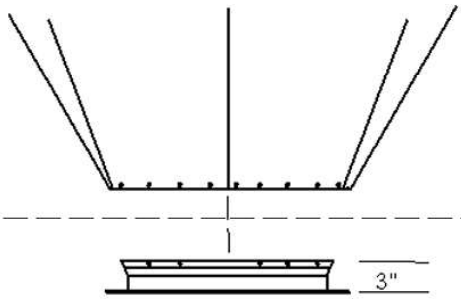

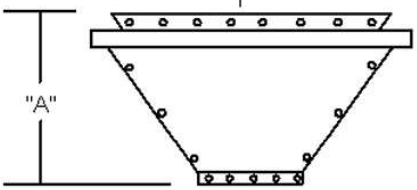

45 DEG. 22" HOPPER COLLAR BLK-10854
60 DEG. 22" HOPPER COLLAR BLK-10342
67 DEG. 22" HOPPER COLLAR BLK-10341

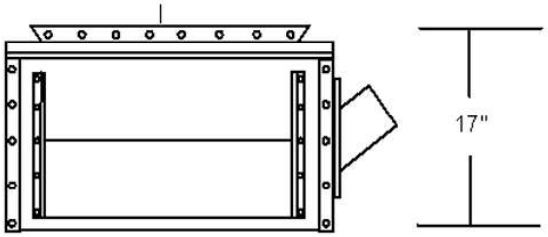

22" METAL BOOTS

22" SINGLE 30 DEG. METAL BOOT FOR 60 DEG. HOPPERS FLX-2911 "A" = 21"
22" DOUBLE 30 DEG. METAL BOOT FOR 60 DEG. HOPPERS FLX-2889 "A" = 17"
22" SINGLE STRAIGHT METAL BOOT FOR 60 DEG. HOPPERS FLX-2919 "A" = 17"
22" DOUBLE STRAIGHT METAL BOOT FOR 60 DEG. HOPPERS FLX-2901 "A" =
22" SINGLE 30 DEG. METAL BOOT FOR 45 DEG. HOPPERS FLX-2909 "A" = 21"
22" DOUBLE 30 DEG. METAL BOOT FOR 45 DEG. HOPPERS FLX-2887 "A" = 17"
22" SINGLE STRAIGHT METAL BOOT FOR 45 DEG. HOPPERS FLX-2917 "A" = 17"
22" DOUBLE STRAIGHT METAL BOOT FOR 45 DEG. HOPPERS FLX-2899 "A" = 14"
22" SINGLE 30 DEG. METAL BOOT FOR 67 DEG. HOPPERS FLX-2910 "A" = 21"
22" DOUBLE 30 DEG. METAL BOOT FOR 67 DEG. HOPPERS FLX-2888 "A" = 17"
22" SINGLE STRAIGHT METAL BOOT FOR 67 DEG. HOPPERS FLX-2918 "A" = 17"
22" DOUBLE STRAIGHT METAL BOOT FOR 67 DEG. HOPPERS FLX-2900 "A" = 14"
22" TRIPLE STRAIGHT METAL BOOT FOR 60° HOPPERS..... FLX-5348 "A" = 15"
22" TRIPLE STRAIGHT METAL BOOT FOR 67° HOPPERS..... FLX-5349 "A" = 15"

E-Z KLEEN OUT BOOTS

60 DEG.	4" 25 DEG.	RA-3062
60 DEG.	4" STRAIGHT	RA-3063
60 DEG.	6" 25 DEG.	RA-3064
60 DEG.	6" STRAIGHT	RA-3065
67 DEG.	4" 25 DEG.	RA-3066
67 DEG.	4" STRAIGHT	RA-3067
67 DEG.	6" 25 DEG.	RA-3068
67 DEG.	6" STRAIGHT	RA-3069

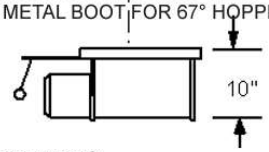

4" RIGID UNLOADER W/BEARING **RA-3036**
6" RIGID UNLOADER W/BEARING & 13/16" ID AUGER SHAFT (OLD) **RA-3037**
6" RIGID UNLOADER W/BEARING & 1" ID AUGER SHAFT (NEW) **RA-30371**

REFER TO FLEX-FLO SECTION FOR FLEX-FLO UNLOADERS BEGINNING ON PAGE 3-61

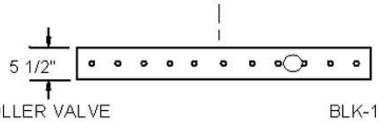

22" ROLLER VALVE BLK-11611
22" RACK & PINION VALVE W/CHAINWHEEL BLK-11613
22" RACK & PINION VALVE W/HANDWHEEL BLK-11612

ROLLER AND RACK & PINION VALVES ARE NOT REQUIRED

WHEN USING A ROTARY VALVE UNLOADER

NOTE: 22" ROLLER & RACK AND PINION VALVES LIMITED TO 50 TONS MAXIMUM

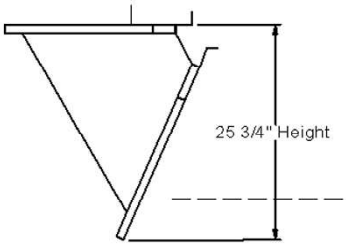

22" LOW PROFILE MAXI-FLO BOOT
BLK-10871

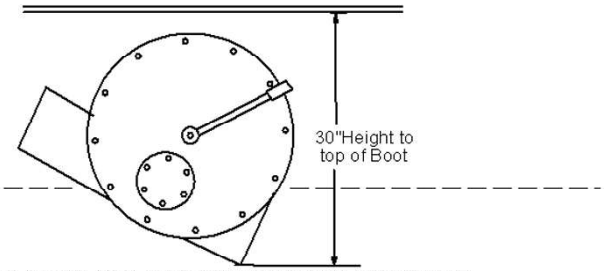

22" RIGID UNLOADERS W/ ROTARY VALVE

4" RIGID UNLOADER (22") W/ROTARY VALVE BLK-10873
6" RIGID UNLOADER (22") W/ROTARY VALVE BLK-10874
8" RIGID UNLOADER (22") W/ROTARY VALVE BLK-10875

Collars & Unloading Boots

22" Collars & Unloading Boots

PART #	DESCRIPTION
BLK-10854	22" 45° Hopper Collar
BLK-10342	22" 60° Hopper Collar
BLK-10341	22" 67° Hopper Collar
BLK-10871	22" Low-Profile "Maxi-Flo" Boot

22" Complete Metal Unloading Boots

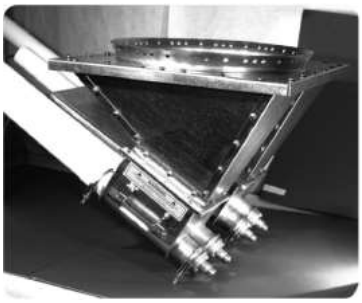

DESCRIPTION	45° Hopper	60° Hopper	67° Hopper
22" Single 30° Metal Boot	---	FLX-2911	FLX-2910
22" Double 30° Metal Boot	FLX-2887	FLX-2889	FLX-2888
22" Single Straight Metal Boot	FLX-2917	FLX-2919	---
22" Double Straight Metal Boot	---	FLX-2901	FLX-2900
22" Triple Straight Metal Boot	---	FLX-5348	FLX-5349
22" Triple 30° Metal Boot	---	FLX-5641	FLX-5642

Metal Unloading Boot Packages & Adapter Plates

PART #	DESCRIPTION
FLX-2908	22" Single 30° Metal Boot Package
FLX-2890	22" Double 30° Metal Boot Package
FLX-2916	22" Single Straight Metal Boot Package
FLX-2895	22" Double Straight Metal Boot Package
FLX-5347	22" Triple Straight Metal Boot Package
BLK-11333	22" Metal Boot Adapter Plate for 45° Hoppers
BLK-11331	22" Metal Boot Adapter Plate for 60° Hoppers
BLK-11332	22" Metal Boot Adapter Plate for 67° Hoppers
FLX-4546	Adapter Plate, Schuld Bin
AP-5040	16" Clamp Ring, Boot Adapter for Schuld-Bushnell

Metal Unloading Boot Replacement Parts & Hardware Packages

PART #	DESCRIPTION
FLX-2709	22" 30° Double Metal Boot-Right Panel
FLX-2710	22" 30° Double Metal Boot-Back Panel
FLX-2711	22" 30° Double Metal Boot-Front Panel
FLX-2712	22" 30° Double Metal Boot-Left Panel
FLX-2903	22" 30° Single Metal Boot-Left Side
FLX-2904	22" 30° Single Metal Boot-Right Side
FLX-2905	22" 30° Single Metal Boot-Front Panel
FLX-2906	22" 30° Single Metal Boot-Back Panel
FLX-2892	22" Straight Double Metal Boot-Side Panel
FLX-2893	22" Straight Double Metal Boot-End Panel
FLX-2894	Support Strap for 22" Double Metal Boot
FLX-2902	22" Double Straight Metal Boot-Hardw are Pkg.

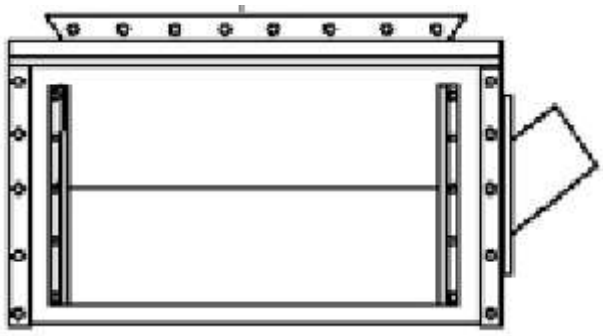

E-Z Kleen Out Boots

PART #	DESCRIPTION
RA-3062	60° 4" 25° Outlet E-Z Kleen Out Boot
RA-3063	60° 4" Straight Outlet E-Z Kleen Out Boot
RA-3064	60° 6" 25° Outlet E-Z Kleen Out Boot
RA-3065	60° 6" Straight Outlet E-Z Kleen Out Boot
RA-3066	67° 4" 25° Outlet E-Z Kleen Out Boot
RA-3067	67° 4" Straight Outlet E-Z Kleen Out Boot
RA-3068	67° 6" 25° Outlet E-Z Kleen Out Boot
RA-3069	67° 6" Straight Outlet E-Z Kleen Out Boot

E-Z Kleen Out Boot Replacement Parts

PART #	DESCRIPTION
BLK-10495	60° Adapter Plate (Green)
BLK-10493	67° Adapter Plate (Red)
RA-3058	4" 25° Flexible Connector Kit
RA-3059	4" Straight Flexible Connector Kit
RA-3060	6" 25° Flexible Connector Kit
RA-3061	6" Straight Flexible Connector Kit
RA-3055	Slide Plate
RA-3041	Wrapper
RA-3043	Slide Shim
RA-3048	Gate Bracket
RA-3049	Gate Handle Lever
RA-3050	Gate Linkage
RA-3051	Gate
RA-3052	Non-Ported End Panel
RA-3053	Ported End Panel
RA-3054	Gate Guide
RA-3042	Connector Plate
RA-3044	4" 25° Flexible Rubber Connector
RA-3045	4" Straight Flexible Rubber Connector
RA-3046	6" 25° Flexible Rubber Connector
RA-3047	6" Straight Flexible Rubber Connector
RA-3057	Connector Kit Hardware
S-4279	5" Geared Hose Clamp
S-4282	5" - 7" Hose Clamp, M-500

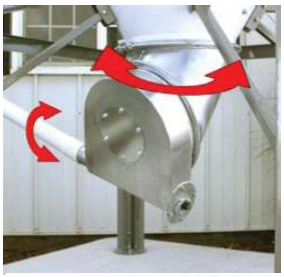

UNLOAD OPTIONS

SCHULD BUSHNELL

Slide Valve for Schuld

Auger Tail Piece

Free Flow Boot

BINS TO SCHULD ACCESSORIES	
PART #	**DESCRIPTION**
300343	Slide Valve 16" Weather Proof Clamp Ring Top & Bottom, Galv.
300585	Slide Valve 16" Weather Proof Slotted Ring Top - Clamp Ring Bottom, Galv.
300312	16" Free Flow Boot With Clamp Ring Top & Bottom (side flow design)
300602	16" Free Flow Boot With Slotted Angle Ring Top - Clamp Ring Bottom
300316	4" Auger Tail Piece - Use With Free Flow Boot or Agitator (Clamp Ring)
300102	4" Auger Tail Piece - Use With Free Flow Boot or Agitator (14" Slotted)
300322	6" Auger Tail Piece - Use With Free Flow Boot or Agitator
300328	8" Auger Tail Piece - Use With Free Flow Boot or Agitator
300022	10" Auger Tail Piece - Use With Free Flow Boot or Agitator
300278	12" Auger Tail Piece - Use With Free Flow Boot or Agitator
300729	Replacement 16" Clamp Ring
** Schuld Tail Pieces DO NOT Work With GSI Tanks w/ 28.5" Clearance, But Will Work With Brock Tanks w/ 32.5" Clearance	

ADAPTERS (To Attach Schuld Accessories To Other Bins)	
ITEM #	**DESCRIPTION**
300930	Coretime / Brock & GSI Bins f/ FF Boots and Small Agitators
300626	Old Schuld 14" Diameter Discharge Bins
300905	Brock Bin Adapter (Sloted Ring For Larger Agitators)
300701-P	5" Boot Spacer(required with agitator and slide gate)

ADAPTERS (To Attach Schuld Bins To Other Accessories)	
ITEM #	**DESCRIPTION**
300623	Poly Boot Adapter For Clamp Ring
300622	Poly Boot Adapter For 16" Slotted Ring
300628	Adapter For Schuld 16" Discharge To Old Schuld 14" Accessories With 16" Clamp Ring For Attachment To Schuld Bolted Bins
300741	Adapter For Schuld 16" Discharge To Old Schuld 14" Accessories With 16" Bolt Ring For Attachment To Schuld Welded Bins

UNLOAD OPTIONS

SCHULD BUSHNELL

ROLLER GATE SLIDE VALVE (Commercial)	
ITEM #	**DESCRIPTION**
300740	16" Roller Slide Gate w/ 16" Clamp Ring for Bolted Bins (Square Discharge)
300669	16" Roller Slide Gate w/ 16" Slotted Ring for Welded Bins (Square Discharge)
300776	16" Roller Slide Gate Adapter (Square to 16" Clamp Ring Discharge
300777	16" Roller Slide Gate Adapter (Square to 16" Slotted Ring Discharge)

CENTER FLOW BOOT WITH SLIDE VALVE (For Bucket Filling - No Tailpiece Included)				
DESCRIPTION	**0° PART #**	**30° PART #**	**37.5° PART #**	**45° PART #**
Center Flow Boot w/ Slide Valve (For Bucket Filling)	300023	300449	300028	300033

REPLACEMENT BOOT TAILPIECES - SLIDE VALVE (pre 1984)	
PART #	**DESCRIPTION**
300101	14" Full Boot (Slotted Ring)
300102	4" Auger Tailpiece (Slotted Ring)
300103	6" Auger Tailpiece (Slotted Ring)
300104	8" Auger Tailpiece (Slotted Ring)
300105	10" Auger Tailpiece (Slotted Ring)
300106	Slide Valve w/ 14" Slotted Ring

CHAIN AGITATORS

SCHULD BUSHNELL

The Schuld/Bushnell CHAIN AGITATOR is the ultimate answer to elimate feed flow problems even with the most difficult feeds. The quick-clamp ring offers 360° positioning, eliminating any problems with bin placement.

ITEM #	Schuld-Bushnell Chain Agitators	Motor Required
300310	Chain Agitator (Side-Flow Discharge) To Be Used On 4.8x1 to 9x8 Bins	1 HP
300320	Chain Agitator (Side-Flow Discharge) To Be Used On 9x10 to 10x13 Bins	2 HP
300311	Chain Agitator, Gear Belt Drive (Side-Flow Discharge) To Be Used On 10x15 to 12x13 Bins	3 HP
300311	Chain Agitator, Gear Belt Drive (Side-Flow Discharge) To Be Used On 12x15 to 16x30 Bins	5 HP

	1-PHASE MOTOR		3-PHASE MOTOR	MOTOR PULLEY	
HP	ITEM #	HP	ITEM #	SIZE	ITEM #
1	00118ES1RFD56-S	1	00118ET3E143T-S	2AK 2.0 x 5/8"	300339
2	00218ET3E145T-W22	2	00218ET3E145T-S	2AK 2.2 x 7/8"	300558
3	00318ES1DFD184T-W22	3	00318ET3E182T-W22	GB 2.5 x 1-1/8"	300999
5	00518ES1DFD184T-W22	5	00518ET3E184T-W22	GB 2.5 x 1-1/8"	300999

ITEM #	AFS Chain Agitators
ADJ-1645	AFS Bin Agitator, 16" 45° Hopper (No Motor)
ADJ-1660	AFR Bin Agitator, 16" 60° (No Motor)
ADJ-1667	AFS Bin Agitator, 16" 67° Hopper (No Motor)
ADJ-1645M	AFS Bin Agitator, 16" 45° Hopper w/ 1ph. Motor
ADJ-1660M	AFS Bin Agitator, 16" 60°Hopper w/ 1ph. Motor
ADJ-1667M	AFS Bin Agitator, 16" 67° Hopper w/ 1ph. Motor
ADJ-1645MT	AFS Bin Agitator, 16" 45° Hopper w/ 3ph. Motor
ADJ-1660MT	AFS Bin Agitator, 16" 60°Hopper w/ 3ph. Motor
ADJ-1667MT	AFS Bin Agitator, 16" 67° Hopper w/ 3ph. Motor

afs

APPLICATIONS

- Ground Corn Meal
- Soybean Meal
- Concentrate
- Lime
- Dense Materials

Specifications

- 2" Shaft
- HD Pillow Block Bearings
- For Bins 6'-9' Diameter
- Requires 2HP Motor
- Belt Driven
- Unload Boot Adjusts 0° to 65°
- Adapts To 16" Bin Collar
- Adjustable Leveling Legs
- Galvanized Motor Cover
- Flex or Rigid Augers Up To 8"

ITEM #	AFS Chain Agitators
ADJ-1001	Hardware Kit
NAP211-32	Pillow Block Bearing, 2"
00218ES1RFD56H-S	Motor, 2HP, 1PH, 1725RPM, 56 Frame
00218ET3E145T-S	Motor, 2HP, 3PH, 1800RPM, 143T Frame
AX58-C	Belt, A58 Cog
2B154SK	Shaft Pulley, 2-Belt SK
2BK25x7/8	Motor Pulley
SK-2	Taper-Lock Bushing, 2" SK
CB-12	Clamp Band, 12"
ADJ-1601	Agitator Discharge Plate

Flex-Flo Auger Systems

Nothing beat's Flex-Flo's™ Feed Delivery System in flexibility and adapability. This system adapts to a variety of configurations and capacities to meet today's demanding production requirements.

Durable PVC Tubing

Polyvinyl chloride (PVC) tubing is extruded and formed to exactling standards and under strict quality control. Blended PVS allows the formulated optimum compound for UV stabilation, strength and wear resistance. Using PVC tubing as the carrier of feed not only provides flexibility in facility design, but reduces dust and provides protection against insect and rodent contamination along with a reduction in operation noise.

Quality Auger

Augers are coiled from high tensile steel for consistent quality and strength. With the use of wire flattened prior to hardening this provides better resistance to distortion and an all-around stronger product.

Flex-Flo™ XD utilizes an exclusive manufactured process resulting in twice the durability of traditional auger, the latest innovation to Flex-Flo's™ product line. XD is available for Models 300, 300P, HR, 350 and 500.

Around The Bend

For moving feed up in the air and around corners, Flex-Flo's™ tubing is available in specially formed elbows with increased wall thickness on the inside of the elbow for added strength and wear resistance.

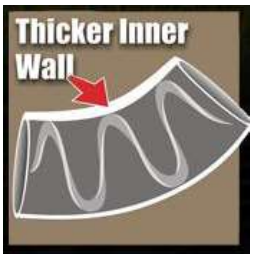

Flex-Flo™ Models

Both tubing and augers are available in a variety of models to fit your specific requirements, whether its ground feed, mash, high moisture corn or pellets.

For corn up to 27% moisture and other hard flow materials, the Flex-Flo High Roughage (HR) system utilizes a combination of a Model 300 auger in a Model 350 tube. For pelleted feeds, a specially designed auger is available for Model 300 Flex-Flo, which increases the tolerance between the tube wall and auger. This increased tolerance prevents auger plugging and damage to expensive pelleted feeds.

Flex-Flo Specifications

Flex-Flo Model Specifications

	Model 220	*Model 300/300P*	*Model 350*	*Model HR*	*Model 500*
*Feed Delivery Rate/Minute	15 Lbs.	50 Lbs.	100 Lbs.	50 Lbs.	220 Lbs.
Std. Power Unit RPM	358	358	358	358	358
Outside Tube Diameter	2.2"	2.95"	3.5"	3.5"	5"
Corner Radius	5' or 10'	5'	5'	5'	5'
Max Length From Bulk Feed Tank	250'	200'	150'	150'	***150'
Max Length Extension	300'	240'	180'	180'	180'
Recommended Motor HP at Max Length	1/2 HP	1 HP	1 HP	1 HP	1.5 HP
Max Moisture Rate	18%	18%	18%	27%	27%
Type of Feeds	Ground, Mash, Small Particle	Ground, Mash, Small Particle, Pellets-(300P)	Ground, Mash, Shelled Corn, Pellets	Shelled Corn, Large Particle, Pellets	Shelled Corn, Large Particle, Pellets
Max Particle Size	1/8" x 1/2"	1/8" x 1/2"	3/16" x 1/2"	3/8" x 3/4"	3/8" x 1"
Can Replace Chore-Time	Model 55	Model 75	Model 90		

* Feed Delivery Rate calculated at standard 40 Lbs./cubit foot material
** Maximum length calculated with NO ELBOWS. Subtract 15' from maximum length for each 45° elbow
*** For High Moisture Corn, reduce system length by 50%
NOTE: When more feed storage or multiple rations require tandem tanks, subtract 50' from the maximum system length

Model 300P Auger represents the latest innovation to the Flex-Flo™ product line.

- **Designed for pelleted feeds**
- **Easy retrofit**
- **No restrictor baffles required**
- **Identical feed flow from all tanks**
- **Slide gates can be opened 100%**
- **Similar system design requirements as Model 300 systems**
- **Can be used for all feed types**

Flex-Flo™ XD Model 350P

Feed Delivery Rate	50 Lbs./Minute or 3,000 Lbs. / Hr.
Max Distance w/ 1 Bulk Feed Tank	210'
Max Distance w/ 2 Bulk Feed Tanks	160'
Max Extension Distance	240'
Max Moisture Rate	18%
Max Daily Run Time	4 Hours
Type of Feeds	Ground, Ma°h, Small Particle & Pellets
Max Particle Size	1/8" x 1/2"

Flex-Flo Auger Systems

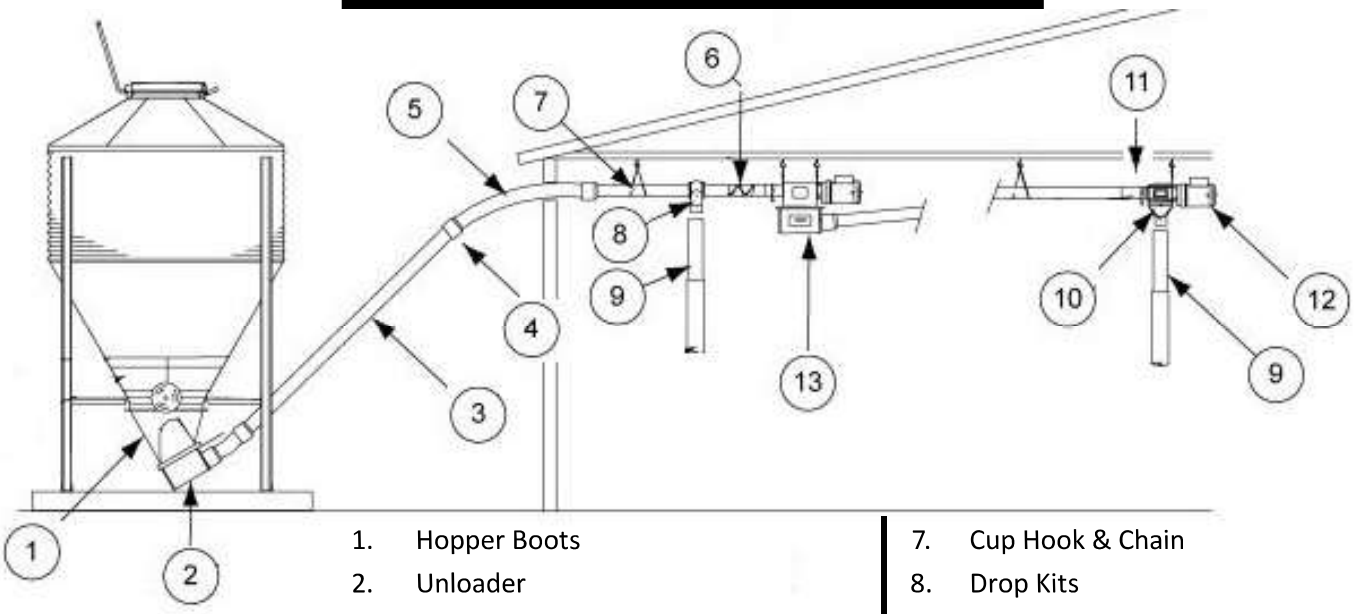

1. Hopper Boots
2. Unloader
3. Straight Flex-Flo Tube
4. PVC Coupler
5. 45° Wear Resistant Elbow
6. Auger
7. Cup Hook & Chain
8. Drop Kits
9. Drop Tubes
10. Control Unit
11. Motor Tube Anchor
12. Direct Drive Power Unit
13. Extension Unloader

1. HOPPER BOOTS

FLX-2195

FLX-2194

FLX-4869

FLX-2195-C

FLX-2194-C

16" PLASTIC BOOTS & ACCESSORIES	
PART #	DESCRIPTION
FLX-2194	Upper Black 30° Boot
FLX-2194-C	Upper Clear 30° Boot
FLX-2194-T	Upper Translucent 30° Boot
FLX-2195	Upper Black Straight Boot
FLX-2195-C	Upper Clear Straight Boot
FLX-2195-T	Upper Translucent Straight Boot
FLX-4869	Upper Black Twin Straight Boot
FLX-4456	Unloader Hardware Package
FLX-2196	16" Plastic Boot Hardware
BLK-11884	15° Wedge For Unloaders
BLK-11137H	Transfer Plate & Slide Gate w/ Hardware
FLX-4234	Double Transfer Plate & Slide Gate

22" FLEX-FLO METAL BOOTS	
PART #	DESCRIPTION
22" BOOTS FOR 60° HOPPERS	
FLX-2911	22" Single 30° Boot For **60**° Hopper
FLX-2889	22" Double 30° Boot For **60**° Hopper
FLX-2919	22" Single Straight Boot For **60**° Hopper
FLX-2901	22" Double Straight Boot For **60**° Hopper
$22" BOOTS FOR 67° HOPPERS	
FLX-2910	22" Single 30° Boot For 67° Hopper
FLX-2888	22" Double 30° Boot For 67° Hopper
FLX-2900	22" Double Straight Boot For 67° Hopper

Unloader Replacement Parts

DESCRIPTION	PART #
MODEL 220	
Anchor & Bearing -Old Style	FLX-2189
Anchor & Bearing -New Style	FLX-4646
Anchor & Bearing For Chore-Time Model 55	FLX-4879
Restrictor Baffle	FLX-4786
MODEL 300	
Anchor & Bearing -Old Style	FLX-2227
Anchor & Bearing -New Style	FLX-4648
Anchor & Bearing For Chore-Time Model 75	FLX-4648C
Single Unloader Baffle Kit	FLX-4749
Twin-Thru Restrictor Baffle Kit	FLX-4621
MODEL 300P	
Anchor & Bearing Model 300P	FLX-5211
MODEL 350	
Anchor & Bearing Model 350-Old Style	FLX-2191
Anchor & Bearing Model 350-New Style	FLX-4650
Single Unloader Baffle Kit	FLX-4750
Twin Unloader Baffle	FLX-4623
MODEL HR	
Anchor & Bearing - Old Style	FLX-2604
Anchor & Bearing - New Style	FLX-4648HR
Single Unloader Baffle Kit	FLX-4749
Twin-Thru Unloader Baffle	FLX-4771
MODEL 500	
Anchor & Bearing Model 500	FLX-2192
Socket Bolt For Model 300(5/16"-18x1-1/2")	S-6481
Socket Bolt For Model 350 (5/16"-18x1-3/4")	S-6482
Direct Drive Anchor Driver & Tube Model 300P	FLX-5282

Old Style 300, 350, HR

Old Style 220

New Style 220

New Style 300, 350, HR

Model 500

Rubber Cap

Slide Kit & Transfer Plate

Bearing Assembly

Clean-Out Plate Assembly

Rubber Cap For Bearing	FLX-4748
Slide Kit & Transfer Plate	BLK-11137
Clean Out Plate-Steel	FLX-4239
Clean Out Plate-Clear	FLX-5127
Bearing Assembly	FLX-2731
Intake Shaft For 4" Unloader	RA-3070
IntakeShaft For 6" Unloader	GK5620

UNLOADER BODY WELDMENTS & OTHER PARTS	
DESCRIPTION	**PART #**
Model 220-Single Thru Unloader Body	FLX-4331
Model 220-Twin Thru Unloader Body	FLX-3938
Model 300/300P-Single Thru Unloader Body	FLX-4669
Model 300/300P-Twin Thru Unloader Body	FLX-4671
Model 350-Single Thru Unloader Body	FLX-2053
Model 350-Twin Thru Unloader Body	FLX-2116B
Model 500-Single Out Unloader Body-Left Hand Door	FLX-2065L
Model 500-Single Thru Body Only	FLX-2944
Iron Ball, 3" Hollow - 1-1/2"	404238
Neoprene Seal	FLX-3422
Flex Seal Ring, Model 220, 300, 350	FLX-2217
Flex Seal Ring, Model 500	FLX-2218

Flex-Flo Tube, Elbows & Couplers

PVC STRAIGHT TUBE

*All Flex-Flo Tube Has One Belled End

DESCRIPTION	PART #
Model 220 PVC Tube, 10'	PVC-1004
Model 220 PVC Tube, 5'	PVC-1004-5
Model 220 PVC Tube, 10' (Bundle of 180)	PVC-1004-180
Model 300 PVC Tube, 10'	PVC-1005
Model 300 PVC, Tube, 5'	PVC-1005-5
Model 300 PVC, Tube, 10' (Bundle of 112)	PVC-1005-112
Model 300P (2.875" OD) PVC Tube, 10'	PVC-1012
Model 350 PVC Tube, 10'	PVC-1006
Model 350 PVC Tube, 5'	PVC-1006-5
Model 350 PVC Tube, 10' (Bundle of 77)	PVC-1006-77
Model 500 PVC Tube, 10'	PVC-1007
Model 500 PVC Tube, 5'	PVC-1007-5
Model 500 PVC Tube, 10' (Bundle of 40)	PVC-1007-40

PVC ELBOWS

DESCRIPTION	PART #
Model 220 PVC 45° Elbow, 10' Radius	PVC-1000
Model 220 PVC 45° Elbow, 5' Radius	PVC-1101
Model 220 PVC 45° Elbow, 5' Radius (Bundle of 54)	PVC-1101-54
Model 300 PVC 45° Elbow, 5' Radius	PVC-1001
Model 300P PVC 45° Elbow, 5' Radius	PVC-1013
Model 350 PVC 45° Elbow, 5' Radius	PVC-1002
Model 350 PVC 45° Elbow, 5' Radius (Bundle of 55)	PVC-1002-55
Model 500 PVC 45° Elbow, 6' Radius	PVC-1003
Model 500 PVC 45° Elbow, 6' Radius (Bundle of 40)	PVC-1003-40

PVC COUPLERS

DESCRIPTION	PART #
Model 220 PVC Coupler	FLX-2537
Model 300 PVC Coupler	FLX-2538
Model 350 PVC Coupler	FLX-2539
Model 500 PVC Coupler	FLX-2540

HANGERS & ACCESSORIES

DESCRIPTION	PART #
PVC Cement - 1/2 Pint	FLX-2470
PVC Cement - 32 Oz.	60-0023
Open Eye Screw - 1/4" x 3-1/2"-Qty. 10	AP-2950
Open Eye Screw - 1/4" x 3-1/2"-Qty. 20	AP-2951
Open Eye Screw - 1/4" x 3-1/2"-Qty. 40	AP-2952
Open Eye Screw - 1/4" x 3-1/2"-Qty. 100	S-7313-B
Open Eye Screw-1/4"x3-1/2" Stainless (40)	S-10237-40
#2 Weldless Chain, 25'	S-8586
#2 Weldless Chain, 50'	S-8587
#2 Weldless Chain, 100'	S-8588
#2 Weldless Chain, 100' Stainless Steel	S-8589-SS-100
#2 Weldless Chain, 400'	S-8589
Wire Hanger Bracket (Mod220)	FLX-2550
Wire Hanger Bracket (Mod220) Qty. 20	FLX-2550BX20
Wire Hanger Bracket (Mod300)	FLX-2551
Wire Hanger Bracket (Mod300) Qty. 20	FLX-2551BX20
Wire Hanger Bracket (Mod350)	FLX-2552
Wire Hanger Bracket (Mod350) Qty. 20	FLX-2552BX20
Wire Hanger Bracket (Mod500)	FLX-2553
Wire Hanger Bracket (Mod500) Qty. 20	FLX-2553BX20

STEEL TUBE, ELBOWS & COUPLERS

DESCRIPTION	PART #
Model 300 Steel 45° Elbow, 5' Radius	FLX-4167-BS
Model 350 Steel 45° Elbow, 5' Radius	FLX-4166P-BS
Model 500 Steel 45° Elbow, 5' Radius	FLX-4165P-BS
Model 300 Steel Tube, 10'-3" w/ Belled End	FLX-4508
Model 350 Steel Tube, 10'-3" w/ Belled End	FLX-4305
Model 500 Steel Tube, 10'-3" w/out Belled End	FLX-4509
Model 300 Steel Coupler	FLX-4493
Model 350 Steel Coupler	FLX-4494
Model 500 Steel Coupler	FLX-4495
3" Tube Clamp (Model 300 Anchor & Bearing)	S-4320
3-1/2" Tube Clamp (Model 350 Anchor & Bearing)	S-4319
5-1/2" Tube Clamp	S-4494

Flex-Flo Auger

FLEX-FLO AUGER
Sold By The Foot

MODEL 220 FLEX-FLO AUGER
(Chore-Time Model 55)

DESCRIPTION	PART #
Model 220 Auger - Up to 90' Lengths	10FLXA1520
Model 220 Auger - 100' to 500' Lengths	100FLXA1520

MODEL 220 EP FLEX-FLO AUGER

DESCRIPTION	PART #
Model 220 EP Auger - Up to 90' Lengths	10FLXA1760
Model 220 EP Auger - 100' to 500' Lengths	100FLXA1760

MODEL 300 & HR FLEX-FLO AUGER
(Chore-Time Model 75)

DESCRIPTION	PART #
Model 300 & HR Auger - Up to 90' Lengths	10FLXA2390
Model 300 & HR Auger - 100' to 500' Lengths	100FLXA2390

MODEL 300P FLEX-FLO AUGER

DESCRIPTION	PART #
Model 300P Auger - Up to 90' Lengths	10FLXA2390
Model 300P Auger - 100' to 500' Lengths	100FLXA2390

MODEL 350 FLEX-FLO AUGER
(Chore-Time Model 90)

DESCRIPTION	PART #
Model 350 Auger - Up to 90' Lengths	10FLXA2710
Model 350 Auger - 100' to 500' Lengths	100FLXA2710

MODEL 500 FLEX-FLO AUGER

DESCRIPTION	PART #
Model 500 Auger - Up to 90' Lengths	10FLXA3800

Drop Kits & Drop Tubes

Standard Drop Kit

Kwik Attach Drop Kit

Telescoping Drop Tube

Galv. Flex Drop Tube

Spring Clip

	MODEL 220	MODEL	MODEL 350	MODEL 500
DESCRIPTION	***PART #***	***PART #***	***PART #***	***PART #***
Standard Drop Kit w/ Pull Cord	FLX-2432	FLX-2433	FLX-2434	FLX-2435
Standard Drop Kit (Pack of 10)	FLX-2588	FLX-2589	FLX-2590	FLX-2591
Kwik Attach Drop Kit	APCD-109	AP-2276	AP-2447	--
Kwik Attach Drop Kit (Pack of 10)	APCD-110	AP-2277	AP-2448	--
Drop Tube, 3" ID x 12'	FLX-2425	FLX-2425	--	--
Telescoping Drop Tube, 3.31" x 6'	FLX-2426	FLX-2426	--	--
Drop Tube, 3.563" ID x 12'	FLX-2427	FLX-2427	FLX-2427	--
Telescoping Drop Tube, 3.94" x 6'	FLX-2428	FLX-2428	FLX-2428	--
Drop Tube For Proximity Control Unit, 12'	AP-1766	AP-1766	AP-1766	--
Galv. Flex Drop Tube, 2.813" ID x 12"	FLX-3482	FLX-3482	--	--
Stainless Flex Drop Tube, 2.813" ID x 12"	FLX-2541	FLX-2541	--	--
Galv. Flex Drop Tube, 2.813" ID x 25'	FLX-2563	FLX-2563	--	--
Stainless Flex Drop Tube, 2.813" ID x 25'	FLX-2567	FLX-2567	--	--
Galv. Flex Drop Tube, 3.406" ID x 12"	FLX-4240	FLX-4240	FLX-4240	--
Stainless Flex Drop Tube, 3.406" x 12"	FLX-2335	FLX-2335	FLX-2335	--
Galv. Flex Drop Tube, 3.406" x 25'	FLX-2564	FLX-2564	FLX-2564	--
Stainless Flex Drop Tube, 3.406" x 25'	FLX-2568	FLX-2568	FLX-2568	--
Drop Tube, 4.375" ID x 12'	--	--	--	FLX-2429
Telescoping Drop Tube, 4.688" ID x 6'	--	--	--	FLX-2430
Galv. Flex Drop Tube, 4.688" ID x 12"	--	--	--	FLX-4241
Stainless Flex Drop Tube, 4.188" ID x 12"	--	--	--	FLX-2336
Galv. Flex Drop Tube, 4.188" ID x 25'	--	--	--	FLX-2565
Spring Clip For Drop Tubes (Pack of 10)	FLX-4278-B	FLX-4278-B	FLX-4278-B	FLX-4278-B

Y-DROPS	
DESCRIPTION	***PART #***
Y-Drop, For 50" Tube Feeder w/ 2 Waters	FLX-0502
Y-Drop, For 50" Tube Feeder w/ 3 Waters	FLX-0503
Y-Drop, For 50" Tube Feeder w/ 3 Waters (Box of 40)	FLX-0503-B
Y-Drop, For 50" Tube Feeder w/ 3 Waters	FLX-0603

Flex-Flo Control Units

SmartIR Sensor

SmartIR Sensor	
DESCRIPTION	***PART #***
SmartIR Feed Level Sensor	FLX-4951
SmartIR Feed Level Sensor (45 Qty.)	FLX-4951-45
Kit, Clear Cover, AP 4" x 6" Electrical Box	AP-4738
I-Plus Feed Sensor	FLX-5262

* AP-4738 Recommended On All Installations

SMART-FLEX & SmartIR REPLACEMENT PARTS	
DESCRIPTION	***PART #***
Cable, IR Sensor Connector	FLX-5001
Smart IR Infrared Sensor Insert Assembly	FLX-5002
Smart IR Power Board Assembly	FLX-5003
Smart IR Front Cover Assembly	FLX-5004
IR-Plus Feed Sensor Housing Assembly	FLX-5000
IR-Plus Feed Sensor Replacement Power Board	FLX-5263

Control Unit

CONTROL UNITS

DESCRIPTION	***PART #***
Model 220/300/350 Flex-Flo Control Unit w/ Sensor	FLX-5295
Model 220/300/350 Flex-Flo Control Unit, 230VAC, 1PH/3PH	FLX-5298
Model 500 Flex-Flo Control Unit w/ Universal Sensor	FLX-5302
Model 500 Flex-Flo Control Unit, 230VAC, 1PH/3PH	FLX-5304

Flex-Flo Control Units

FLX-5295 CONTROL UNIT REPLACEMENT PARTS
Models 220 / 300 / 350

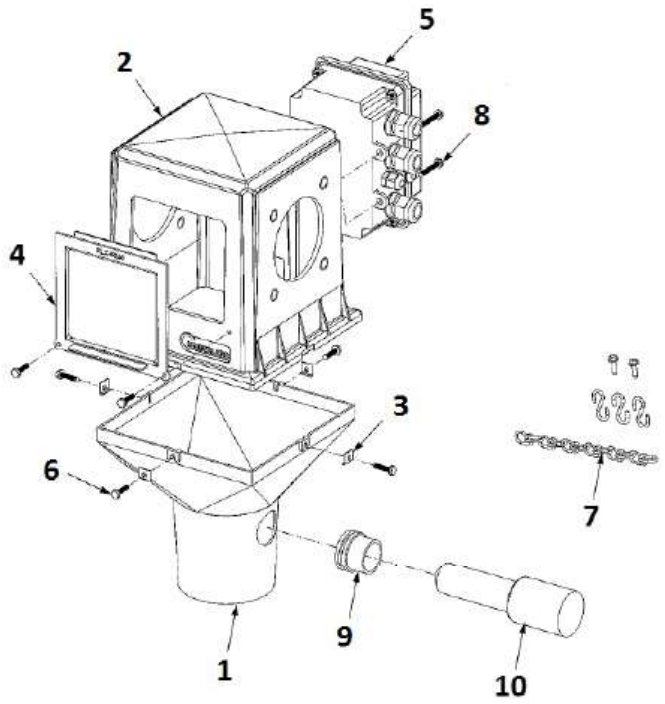

FLX-5295 CONTROL UNIT PARTS LIST

REF #	DESCRIPTION	QTY.	PART #
1	Powerhead Drop w/ Sensor Hole	1	AP-1738H
2	Control Unit Body w/ Compression Limiters	1	FLX-5226A
3	Retaining Clip Power Head Drop	4	AP-2213
4	Inspection Door	1	FLX-5230
5	Flex-Flo Control Unit (see parts breakdown on Page 37)	1	FLX-5260
6	Screw, SDS #10 x 3/4 HWH SS410	6	S-8045
7	Control Unit Hardware	1	FLX-2682
8	Screw, SDS #10-16 x 1-1/4 HWH SS410	4	S-7419
9	Grommet, 36.5 x 4MM Groove For Proximity Switch	1	AP-1004
10	Sensor, Universal Feed For Horizontal Use For All Application	1	AP-2983

FLX-5298 CONTROL UNIT REPLACEMENT PARTS
Models 220 / 300 / 350

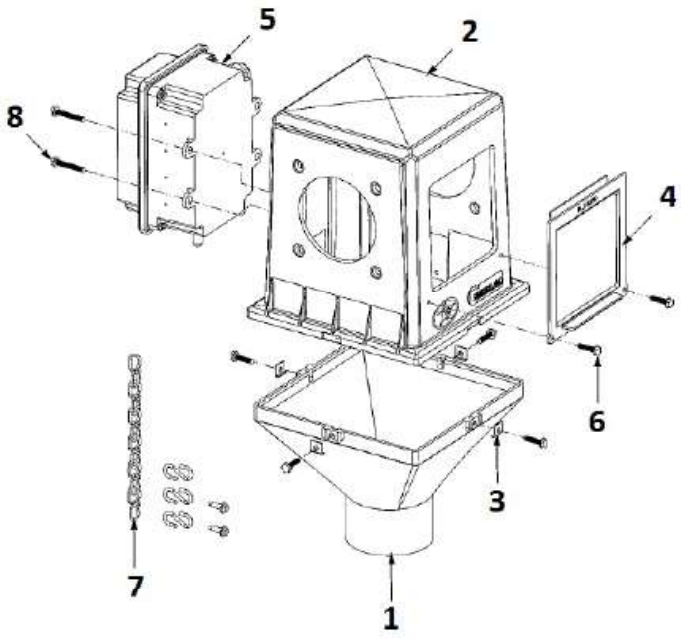

FLX-5298 CONTROL UNIT PARTS LIST

REF #	DESCRIPTION	QTY.	PART #
1	Powerhead Drop w/out Sensor Hole	1	FLX-2017
2	Control Unit Body w/ Compression Limiters	1	FLX-5226A
3	Retaining Clip Power Head Drop	4	AP-2213
4	Inspection Door	1	FLX-5230
5	Flex-Flo Control Unit (see parts breakdown on Page 37)	1	FLX-5260
6	Screw, SDS #10 x 3/4" HWH SS410	6	S-8045
7	Control Unit Hardware	1	FLX-2682
8	Screw, SDS #10-16 x 1-1/4" HWH SS410	4	S-7419

Flex-Flo Control Units

FLX-5304 CONTROL UNIT REPLACEMENT PARTS
Models 500

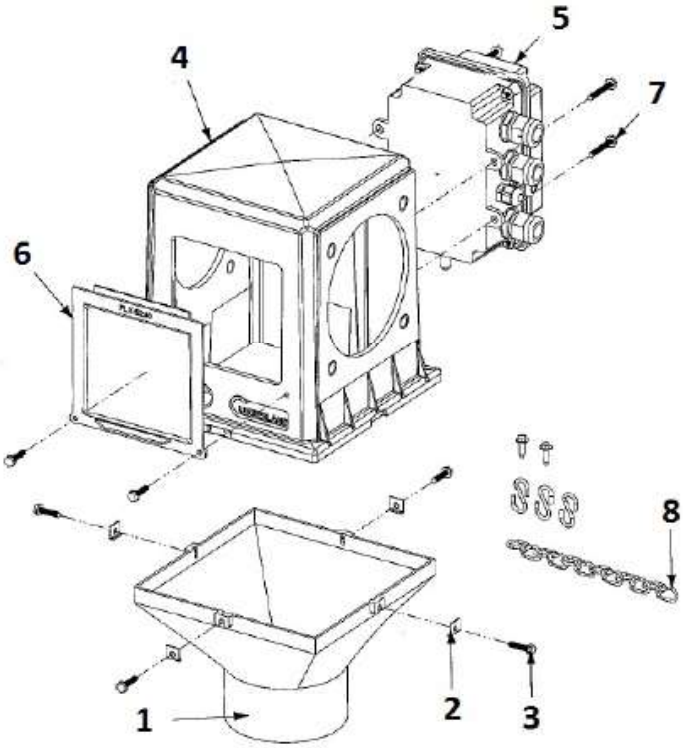

FLX-5304 CONTROL UNIT PARTS LIST

REF #	DESCRIPTION	QTY.	PART #
1	Powerhead Drop - No Hardware Included	1	FLX-2309
2	Retaining Clip	4	AP-2213
3	Screw, SDS #10 x 3/4" HWH SS410	6	S-8045
4	Control Unit Body w/ Compression Limiters	1	FLX-5243A
5	Flex-Flo Control Unit (see parts breakdown on Page 37)	1	FLX-5260
6	Inspection Door	1	FLX-5230
7	Screw, SDS #10-16 x 1-1/4" HWH SS410	4	S-7419
8	Control Unit Hardware	1	FLX-2682

SMART-FLEX (FLX-5301) REPLACEMENT PARTS
Models 220 / 300 / 350

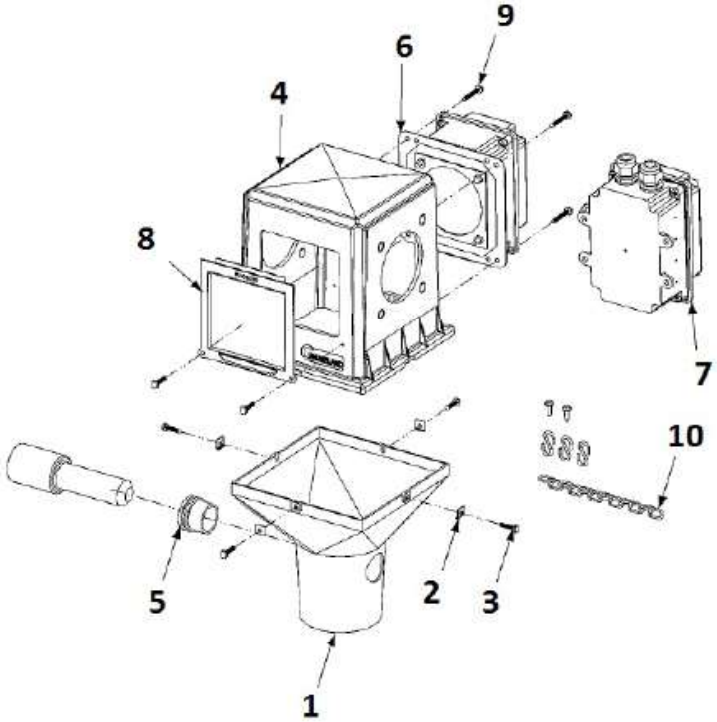

FLX-5301 SMART-FLEX PARTS LIST

REF #	DESCRIPTION	QTY.	PART #
1	Powerhead Drop w/ Sensor Hole	1	AP-1738H
2	Retaining Clip	4	AP-2213
3	Screw, SDS #10 x 3/4 HWH SS410	6	S-8045
4	Control Unit Body w/ Compression Limit-ers, Micro Switch	1	FLX-5238A
5	Grommet, 36.5 x 4 MM Groove For Proximity Switch	1	AP-1004
6	Smart-Flex Control Electrical Box	1	FLX-4629
7	Smart-Flex Relay Box Assembly	1	FLX-4778
8	Inspection Door	1	FLX-5230
9	Screw, SDS #10-16 x 1-1/4 HWH SS410	4	S-7419
10	Control Unit Hardware	1	FLX-2682

Flex-Flo Control Units

FLX-5260 CONTROL UNIT REPLACEMENT PARTS

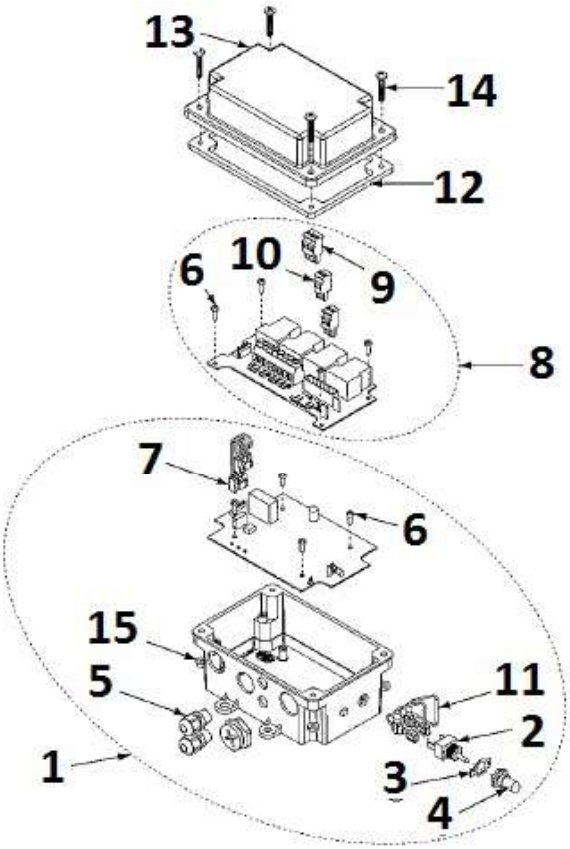

FLX-5260 CONTROL UNIT

REF #	DESCRIPTION	QTY.	PART #
1	Bottom Circuit Board w/ Enclosure	1	FLX-5350
2	Switch, Toggle SPST 15A w/ ON/OFF	1	20-5060
3	ON-OFF Back Plate	1	S-6622
4	Boot Switch, Weatherproof	1	70-0129
5	Cable Gland, PG7 Thread Size	2	S-10292
6	Screw, MS #6-32 x 3/8" PHP ZN	8	S-8183
7	Plug, 4 Wire for FLX-5260	1	FLX-5308
8	Top Circuit Board Assembly	1	FLX-5350
9	Terminal Block Plug, Three Connector	1	FLX-5270-3
10	Terminal Block Plug, Two Connector	2	FLX-5270-2
11	Wire Kit For Switch	2	E105-1024
12	4" x 6" Electrical Box Gasket	1	FLX-4561
13	Cover, Electrical Box Lid 4" x 6"	1	FLX-4560
14	Screw, MS #10-24 x 1 PHP, SS	4	S-995
15	Nut, Hex #10-24 SS - 304 or 316 SSS-7931	4	S-7931

Flex-Flo Driver & Tube Anchors

DIRECT DRIVE ANCHOR KIT

***Kits Include Tube Plate, Clamp,**

Motor Spindle & Hardware

COMPLETE KITS

DESCRIPTION	PART #
Model 220 Direct Drive Kit	FLX-5275
Model 300 Direct Drive Kit	FLX-5279
Model 300P Direct Drive Kit	FLX-5282
Model 350 Direct Drive Kit	FLX-5286
Model HR Direct Drive Kit	FLX-5288
Model 500 Direct Drive Kit	FLX-5293

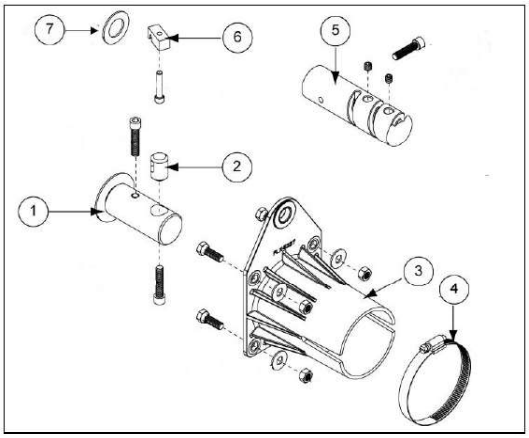

REPLACEMENT PARTS

REF #	DESCRIPTION	PART #
1	Positive Lock Spindle Model 300	FLX-4572
1	Positive Lock Spindle-Model 300P	FLX-4572A
1	Postive Lock Spindle-Model 350	FLX-4575
1	Positive Lock Spindle-Model 500	FLX-2975
2	Auger Lock Clamp Pin Model 300, 300P & 350	FLX-4571
2A	Auger Lock Clamp Pin-Model 500	FLX-2974
3	Anchor Tube Plate-Model 220	FLX-5229
3	Anchor Tube Plate-Model 300(P)	FLX-5227
3	Anchor Tube Plate-Model 350	FLX-5228
3	Anchor Tube Plate-Model 500	FLX-5239
4	Hose Clamp - Model 220	AP-0583
4	Hose Clamp - Model 300(P)/350	AP-0584
4	Hose Clamp - Model 500	S-4282
5	Drop Feed Control Anchor Pkg. Model 220	FLXDF-1183
6	Auger Lock - Model 220	FLX-4543
6	Auger Lock - Model 350	FLX-4575
7	Anchor Washer - Model 220	FLX-2685

BELT DRIVE ANCHOR KIT

***Kits Include Tube Plate, Clamp,**

Motor Spindle & Hardware

DESCRIPTION	PART #
Drive Belt Power Unit (order 1 per Belt Drive Flex-Flo System)	FLX-4179
Model 220 Belt Drive Kit	FLX-5274
Model 300 Belt Drive Kit	FLX-5278
Model 350 Belt Drive Kit	FLX-5285
Model HR Belt Drive Kit	FLX-5287
Model 500 Belt Drive Kit	FLX-5292

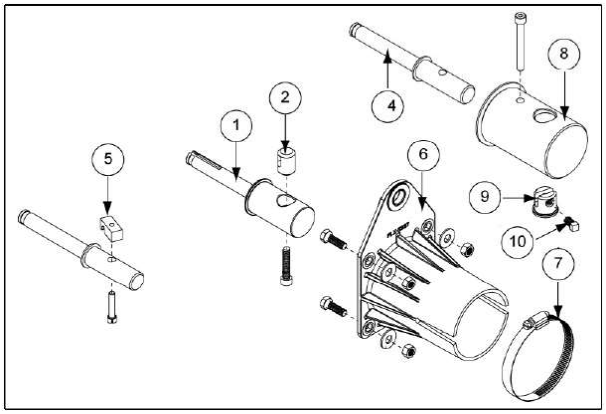

REPLACEMENT PARTS

REF #	DESCRIPTION	PART #
1	Positive Lock Belt Driver-Model 220	FLX-2979
1	Positibe Lock Belt Driver-Model 300	FLX-4578
1	Positive Lock Belt Driver-Model 350	FLX-4579
2	Auger Lock Clamp-Model 300 & 350	FLX-4571
4	Belt Driver-Model 500	FLX-2975
5	Auger Lock-Model 220	FLX-4543
6	Anchor Tube Plate-Model 220	FLX-5229
6	Anchor Tube Plate-Model 300	FLX-5227
6	Anchor Tube Plate-Model 350	FLX-5228
6	Anchor Tube Plate-Model 500	FLX-5239
7	Hose Clamp - Model 220	AP-0583
7	Hose Clamp - Model 300(P)/350	AP-0584
7	Hose Clamp - Model 500	S-4282
8	Drive Spindle - Model 500	FLX-2975
9	Clamp Pin - Model 500	FLX-2974
10	Set Screw, 5/16"-18 x 1/2" SQ HD	S-4312

Flex-Flo Direct Drives

COMPLETE DIRECT DRIVE ASSEMBLIES

SINGLE-PHASE DIRECT DRIVE UNITS
Voltage: 115/208-230

HP	RPM @ 60Hz	PART #
1/3	358	FLX-2458
1/2	358	FLX-2459
3/4	358	FLX-2460
1	358	FLX-2461
1-1/2	358	FLX-2462
1/3	250	FLX-2672
1/2	250	FLX-2673
3/4	250	FLX-2674
1	250	FLX-3629
1-1/2	250	FLX-3637

THREE-PHASE DIRECT DRIVE UNITS
Voltage: 208-230/460

HP	RPM @ 60Hz	PART #
1/3	358	FLX-3546
1/2	358	FLX-3549
3/4	358	FLX-3543
1	358	FLX-3552
1-1/2	358	FLX-3535
1/2	250	FLX-4873
3/4	250	FLX-5044

INDIVIDUAL DRIVE COMPONENTS

MOTOR ONLY

HP	PHASE	Volts	AMPS	PART #
1/3	1PH	115/230	5.2/2.6	FLX-5249
1/2	1PH	115/230	8.0/4.0	FLX-5250
3/4	1PH	115/230	10.6/5.3	FLX-5251
1	1PH	115/230	10.8/5.4	FLX-5252
1-1/2	1PH	115/230	13.2/6.7	FLX-5253
1/3	3PH	208-230/460	2.0/1.0	FLX-5254
1/2	3PH	208-230/460	2.0/1.0	FLX-5255
3/4	3PH	208-230/460	2.6/1.3	FLX-5256
1	3PH	208-230/460	3.4/1.7	FLX-5257
1-1/2	3PH	208-230/460	4.5/2.3	FLX-5258

GEARBOX ONLY
(Pinion gear not included)

RPM	PART #
64	FLX-2931
156	FLX-4400
250	FLX-4403
358	FLX-4277
441	FLX-4405

INPUT SEAL AND GEAR LUBE

DESCRIPTION	PART #
Input Seal (All Models)	FLX-3774
Gear Lube (15oz.)	FLX-4471

THERMAL OVERLOAD

HP	PART #
1/3	FLX-4286
1/2	FLX-5271
3/4	FLX-5272
1	FLX-5273
1-1/2	FLX-4793

PINION GEARS

DESCRIPTION	PART #
1/2" Shaft Pinion Gear, 14-Tooth (For 1/3HP and 3/4HP Motors)	FLX-4275
5/8" Shaft Pinion Gear, 14-Tooth (For 3/4HP and 1-1/2HP Motors)	FLX-4276
5/8" Shaft Pinion Gear, 14-Tooth, 3" (For 1HP or 1-1/2HP Motors)	FLX-4542

Flex-Flo Belt Drive

FLEX-FLO BELT DRIVE UNIT	
DESCRIPTION	PART #
Belt Drive Unit	FLX-4179

MOTORS				
HP	PHASE	Volts	AMPS	PART #
1/2	1PH	115/230	7.4/3.7	.5018ES1RFDW56-S
3/4	1PH	115/230	10.6/5.3	.7518ES1RFD56-S
1	1PH	115/230	14/7	00118ES1RFD56-S
1-1/2	1PH	115/30	17.4/8.7	00158ES1RFD56H-S
1	3PH	208-230/460	3.25-2.94/1.47	00118ET3E143T-S
1-1/2	3PH	208-230/460	4.47-4.04/2.02	00158ET3E145T-S

BELT-DRIVE REPLACEMENT PARTS

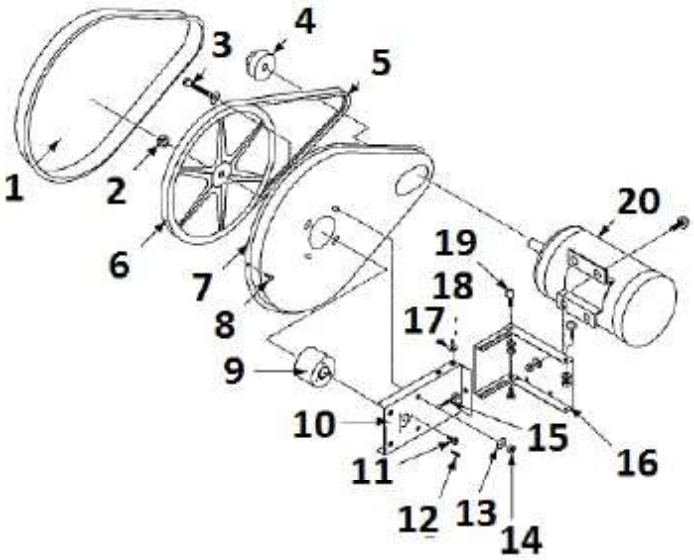

REF #	DESCRIPTION	PART #
1	Belt Guard Cover	FLX-2986
2	5/8" I.D. Locking Collar	S-4307
3	Bolt, HHTB 5/16"-18 x 1-3/4" ZN Gr5	S-7149
4	2.7" A-Belt Single-Groove Pulley (5/8" Bore)	S-6242
5	AX51 Gripnotch Belt	BLK-11086
6	14" A-Belt Single-Groove Pulley	S-6240
7	Belt Guard Back	FLX-2987
8	Screw, SDS #10-16 x 5/8" HWH ZN	S-280
9	Flex-Flo Anchor Bearing Assy & Set Screw	FLX-2734S
10	Inner Belt Drive Motor Bracket	FLX-5043
11	1/4"-20 x 5/8" Allen Head Bolt	S-4309
12	Key, SQ 3/16" x 1" Long	S-8426
13	Flat Washer, 5/16" Gr2	S-845
14	Hex Nut, 5/16"-18 Gr2	S-396
15	Bolt, HHTB 5/16"-18 x 2-1/2" Gr2	S-7299
16	Outer Belt Drive Motor Bracket	FLX-5042
17	Lock Washer, Split 5/16" Zn	S-1147
18	Bolt, HHTB 5/16"-18 x 3/4" Gr5	S-4275
19	Eye Bolt, 5/16"-18 x 2-1/8" (w/ Nut)	S-6236
20	Motor (see above chart)	--

Flex-Flo Feed Level Controls

AP-2983

FLX-5262

6600-0110-HH

FLX-3802

FLXDF-1172

DESCRIPTION	PART #
Plastic Drop Tube Switch, 110/220V	AP-0990
Proximity Drop Tube Switch, 220V W. Universal Proximity Switch	AP-0992
Hopper Level Control Switch	AP-0994
Sensor, Universal Feed For Horizontal Mounting Use For All Applications	AP-2983
Universal Feed Sensor For Horizontal Mounting w/ Grommet	AP-2983G
Universal Sensor and Relay Box	AP-2870
Switch, Proximity 110V Skov	AP-1001
Switch , Proximity 110V Skov w/ Grommet	AP-1001G
Switch, Proximity 220V Skov	AP-1002
Switch, Proximity 220V Skov w/ Grommet	AP-1002G
Grommet, 36.5 x 2 MM Groove	AP-1003
Grommet, 36.5 x 4 MM Groove For Proximity Switch	AP-1004
Proximity Switch 20-250V, NC (Orange Sensor For APCD-294 Tube Sensor)	FLXDF-1172
Nut, 30 MM For FLXDF-1172 & FLX-4256 Proximity Switch	FLXDF-1172N
Proximity Switch 20-250V, NO (Orange Sensor For APCD-294 Tube Sensor)	FLX-4256
Unloader Switch, Micro Switch	FLX-4160
Proximity Unloader Switch, 110V and 220V	FLX-4530
I-Plus Feed Sensor	FLX-5262
Adapt Tube, Model 300 Drop Kit to IR Plus Sensor	FLX-5266
Flex-Flo Hopper Level Control Switch	FLX-3802
Sens-O-Matic Feed Hopper Switch - 120V 60Hz	6606-0110-HH
Sens-O-Matic Feed Hopper Switch - 240V 60Hz	6606-0114-HH
Sens-O-Matic Adjustable Mounting Bracket Kit	C2000515
Hopper Level Control Micro Switch	7051400
Hopper Level Control with Proximity Switch	7051400P
Lower Hopper Switch with Cord	FLX-4152
Lower Hopper Switch, 220V with Light and Cord	C2000195

FLEX-FLO CONTROL TIMERS

DESCRIPTION	PART #
Timer, 24 Hour Single Channel	TC4-T10
Timer, 24 Hour Three Channel	TC4-T30
Maximum Run Timer	E100-A1047
1-1023 Second Time Delay w/out Relay	FLX-4523

4 - BIN ACCESSORIES

Grain Spreaders	2-3
Bin Hardware & Sealer	4
Floor Supports	5
Axial Aeration Fans	6-11
Centrifugal Aeration Fans	12-21
Roof Vents & Roof Exhausters	22
Ladders & Platforms	23-29
Bin Level Indicators	30-39
In-Bin Grain Sampler	40
Bin Fall Protection	40

Spread-master
Grain Spreaders

GRAVITY SPREADERS

DESCRIPTION	PART #
Stationary Cone Funnel - For Bins Up To 26' Diameter - Will Handle Up To 6" Auger - 2,500 BPH Capacity - Maximum Outside Diameter: 20" (see adapter brackets if needed) - Funnel Cone: 6" - Height: 16.50"	GD-60C
Standard Gravity Spreader - For Bins Up To 27' Diameter - Will Work With Up To An 8" Auger - 2,000 BPH Capacity - Rotary Type, Fully Adjustable, Galv. Construction - Weight: 31 lbs.	GD-61C
Super Gravity Spreader - For Bins 27'-30' - 3,000 BPH Capacity - Lowers Directly Into Bin - Simple 6-Position Adjustment of Spreader Arms - Weight: 41 lbs.	GD-64C
Super Gravity Spreader (Large) - 36' Maximum Bin Diameter - 5,000 BPH Capacity - Lowers Directly Into Bin - Simple 6-Position Adjustment of Spreader Arms - Weight: 65 lbs.	GD-65C
Rotary Spin-Level Standard - For Bins Up To 30' Diameter - 3,600 BPH Capacity - Will Work With Up To An 8" Auger - Hanger Reach Diameter: 22-30" (see adapter brackets if needed) - Overal Height: 29" - Max Hopper Dia: 17" - Spinner: 22" W x 31" Long - Weight: 18 lbs.	GD-70D
Rotary Spin-Level Medium - For Bins Up To 36' Diameter - 5,000 BPH Capacity - Works With Up To A 10" Auger - Overall Height: 44" - Hopper Diameter: 19" Max - Spinner Diameter: 38" Max - Hanger Reach Diameter: 24"-32" - Weight: 48 lbs.	GD-71C
Super Spin-Level- Standard - For Farm Bins Up To 36' Dia./60' Comm. w/ Bunker - 7,500 BPH Capacity - Weight: 78 lbs.	GD-73B
Super Spin-Level- Medium - Maximum Bin Diameter: 60' - 10,000 BPH Capacity - Weight: 92 lbs.	GD-73C
Super Spin-Level- Large - Maximum Bin Diameter: 60' - 15,000 BPH Capacity - Weight: 155 lbs.	GD-73XL

COMMERCIAL USE

- Lower Directly Into Bin
- No Tools Or Fasteners
- Easy-Set Adjustment
- No Motor Or Electric
- Galvanized Construction

ADAPTER BRACKETS	PART #
For 30-36" Vent Openings	SPGD-BR-1
For 38"-42" Vent Openings	SPGD-BR-2

ELECTRIC SPREADERS

MODEL FFD-120-WH

- Handles up to 3,000 Bu/Hr
- Energy Efficient 1/2HP, 115V Motor
- All Galvanized Construction
- Standard Wide Throw Blade
- Standard Flow Diverter Kit

MODEL FFD-200-1 & FFD-200-3

- Handles up to 6,000 Bu/Hr
- Energy Efficient 1HP 1 Phase or 3 Phase
- Heavy-Duty 14-Gauge Cone
- All Galvanized Construction

ELECTRIC GRAIN SPREADERS

Description	*HP*	*Voltage*	*Part #*
Scattergrain 1PH	1/2HP	115V	FFD-120-WH
Scattergrain 1PH	1HP	115/230V	FFD-200-1
Scattergrain 3PH	1HP	230/460V	FFD-200-3

DAMPER PLATE
Adjustable plates in the blade allow grain to be distributed evenly in the center of the bin.

ADJUSTABLE MOUNT
All models mount in the openings up to 31" diameter. A special is available for openings up to 60" diameter.

GRAIN GUIDES
The grain guide adjusts to help distribute grain to the outer areas of the bin

SEALED GEAR DRIVE & MOTOR
The gear drive is encased in heavy-duty, hi-temp, food grade lubricant which assures years of virtually manintenance-free operation. Direct drive means no belts and no adjustments

HARDWARE

Bin Bolts

	PART #	DESCRIPTION
3/8"	Bolt-3/8x1 /100	3/8'' x 1'' Bin Bolt W/ Seal Washer Grade 8 (Bag /100)
	Bolt-3/8x1 /Pc	3/8'' x 1'' Bin Bolt W/ Seal Washer Grade 8 (Per /Piece)
	Bolt-3/8x1-1/4 /100	3/8'' x 1-1/4'' Bin Bolt W/ Seal Washer Grade 8 (Bag /100)
	Bolt-3/8x1-1/4 /Pc	3/8'' x 1-1/4'' Bin Bolt W/ Seal Washer Grade 8 (Per /Piece)
	Bolt-3/8x1-3/4 /100	3/8'' x 1-3/4'' Bin Bolt W/ Seal Washer Grade 8 (Bag /100)
	Bolt-3/8x1-3/4 /Pc	3/8'' x 1-3/4'' Bin Bolt W/ Seal Washer Grade 8 (Per /Piece)
Pan Head	Bolt-T-5/16x3/4 /100	5/16'' x 3/4'' Truss-Pan Head Bin Bolt W/ Washer (Per /100)
5/16"	Bolt-5/16x1 /100	5/16'' x 1'' Bin Bolt W/ Seal Washer Grade 8 (Bag /100)
	Bolt-5/16x1 /Pc	5/16'' x 1'' Bin Bolt W/ Seal Washer Grade 8 (Per / Piece)
	Bolt-5/16x1-1/2 /Pc	5/16'' x 1-1/2'' Bin Bolt W/ Seal Washer Grade 8 (Per / Piece)
	Bolt-5/16x1-1/4 /100	5/16'' x 1-1/4'' Bin Bolt W/ Seal Washer Grade 8 (Bag /100)
	Bolt-5/16x1-1/4 /Pc	5/16'' x 1-1/4'' Bin Bolt W/ Seal Washer Grade 8 (Per / Piece)
	Bolt-5/16x1-3/4 /100	5/16'' x 1-3/4'' Bin Bolt W/ Seal Washer Grade 8 (Bag /100)
	Bolt-5/16x1-3/4 /Pc	5/16'' x 1-3/4'' Bin Bolt W/ Seal Washer Grade 8 (Per / Piece)
	Bolt-5/16x3 /Pc	5/16'' x 3'' Bin Bolt W/ Seal Washer Grade 8 (Per / Piece)

Sealers

PART #	DESCRIPTION
S-4458	Caulink Sealant (Bin Sheet Tape) 1/8" x 1/4" x 24' Roll
S-10184	GSI Butyl Rubber Base Sealer Strip 5 Pieces per Box
J23313	Sukup Foundation Base Sealer (3/8" x 3/4" x 20')
J23312	Sukup Base Angle Sealant (1/2" x 1-1/2" x 20')

		PART #	DESCRIPTION
Flange Nuts	1/4"	F-58577	Serrated Flange Nut, 1/4''-20, Zinc Plated (Each)
		F-58577 /100	Serrated Flange Nut, 1/4''-20, Zinc Plated (Bag /100)
	5/16"	F-58578	Serrated Flange Nut, 5/16''-18, Zinc Plated (Each)
		F-58578 /100	Serrated Flange Nut, 5/16''-18, Zinc Plated (Bag /100)
	3/8"	F-58579	Serrated Flange Nut, 3/8''-16, Zinc Plated (Each)
		F-58579 /100	Serrated Flange Nut, 3/8''-16, Zinc Plated (Bag /100)
	7/16"	F-58580	Serrated Flange Nut, 7/16''-14, Zinc Plated (Each)
		F-58580 /100	Serrated Flange Nut, 7/16''-14, Zinc Plated (Bag /100)
	1/2"	F-58581	Serrated Flange Nut, 1/2''-13, Zinc Plated (Each)
		F-58581 /100	Serrated Flange Nut, 1/2''-13, Zinc Plated (Bag /100)
Hex Nuts	1/4"	F-58860	Hex Nut-Standard, 1/4''-20 Zinc (Each)
		F-58860 /100	Hex Nut-Standard, 1/4''-20 Zinc (Bag /100)
	5/16"	F-58861	Hex Nut-Standard, 5/16''-18 Zinc (Each)
		F-58861 /100	Hex Nut-Standard, 5/16''-18 Zinc (Bag /100)
	3/8"	F-58862	Hex Nut-Standard, 3/8''-16 Zinc (Each)
		F-58862 /100	Hex Nut-Standard, 3/8''-16 Zinc (Bag /100)
	7/16"	F-58863	Hex Nut-Standard, 7/16''-16 Zinc (Each)
		F-58863 /100	Hex Nut-Standard, 7/16''-16 Zinc (Bag /100)
Lock Nuts	1/4"	F-59756	Nylon Lock Nut, 1/4''-20 Zinc (Each)
		F-59756 /100	Nylon Lock Nut, 1/4''-20 Zinc (Bag /100)
	5/16"	F-59757	Nylon Lock Nut, 5/16''-18 Zinc (Each)
		F-59757 /100	Nylon Lock Nut, 5/16''-18 Zinc (Bag /100)
	3/8"	F-59758	Nylon Lock Nut, 3/8''-16 Zinc (Each)
		F-59758 /100	Nylon Lock Nut, 3/8''-16 Zinc (Bag /100)
	7/16"	F-59759	Nylon Lock Nut, 7/16''-14 Zinc (Each)
		F-59759 /100	Nylon Lock Nut, 7/16''-14 Zinc (Bag /100)
	1/2"	F-59760	Nylon Lock Nut, 1/2''-13 Zinc (Each)
		F-59760 /100	Nylon Lock Nut, 1/2''-13 Zinc (Bag /100)
	Self Tappers	F-63342 /100	1/4''(#14) x 1'' Self Drilling Screw Hex Head (Per /100)
		F-63345 /100	1/4''(#14) x 1-3/4'' Self Drilling Screw Hex Head (Per /100)

SUKUP FLOOR SUPPORTS

Style	Plenum Clearance	Description	Part #
Z	4"	5-1/4" x 18ga. Z-Style Floor Support	P0008
	12"	13-1/4" x 20ga. Z-Style Floor Support	P0023
		13-1/4" x 18ga. Z-Style Floor Support	P0013
		18-1/2" x 18ga. Z-Style Floor Support	P0018
	15-3/4"	17" x 20ga. Z-Style Floor Support	P0027
		17" x 18ga. Z-Style Floor Support	P0017
	17-/14"	18-1/2" x 20ga. Z-Style Floor Support	P0028
Super Wave	12"	13-1/4" x 20ga. SuperWave Half Floor Support	PW00231
		13-1/4" x 20ga. SuperWave Floor Support	PW0023
	12-5/8"	13-7/8" x 20ga. SuperWave Floor Support	PW0024
	14-5/8"	15-7/8" x 20ga. SuperWave Half Floor Support	PW00161
	15-3/4"	17" x 20ga. SuperWave Half Floor Support	PW00171
		17" x 20ga. SuperWave Floor Support	PW0017
Flat Top Super		Support,Super,5 1/4",Dble	P5001
		Support,Super,5 1/4",Dbl,Hd	P50011
		Support,Super,5 1/4".	P5002
	12"	13-1/4" Flat Top Double Super Support	P5005
		13-1/4" Flat Top H.D. Double Super Support	P50051
		13-1/4" Full Super Support	P5006
		13-1/4" Flat Top Full Super Support	P50061
	15-3/4"	17" Flat Top Double Super Support	P5007
		17" Flat Top H.D. Double Super Support	P50071
		17" Full Super Support	P5008
		17" Flat Top Full Super Support	P50081

FLASHING	
DESCRIPTION	PART #
Flashing,Std,1Pc,20Gx10.37	P0033
Flashing,Std,Pc,Slimcut 2008	P00331
Flashing,Pad Aeration,5.5"X12	P0049

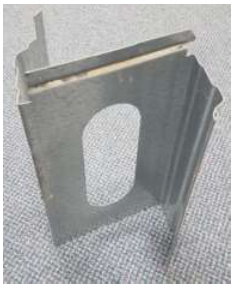

DESIGNED USES FOR SUKUP FLOORS & SUPPORTS	HAWK CUT®	PERFORATED	HEAVY-DUTY PERFORATED
Z-Post	x	x	
Super Supports™	x	x	
Flat Top Super Supports™			x
SuperWave® Supports	x	x	x

Several options of Sukup Supports are available. To select the proper support to match your Sukup Bin Floor, refer to the chart above.

GSI FLOOR SUPPORTS

Style	Plenum Clearance	Description	Part #
Grand Stand	11-7/8"	13-3/8" x 20ga. Grandstand Support	FL-379-191
	14-3/8"	15-7/8" x 20ga. Grandstand Support	FL-379-193
	17-3/16"	18-11/16" x 20ga. Grandstand Support	FL-379-192

BROCK FLOOR SUPPORTS

Style	Plenum Clearance	Description	Part #
Parthenon	12-1/4"	Brock Parthenon Support (Low/Short)	9-49931
		Brock Parthenon Support (Low/Long)	9-49930
	16-7/8"	Brock Parthenon Support (High/Short)	9-49933
		Brock Parthenon Support (High/Long)	9-49932

Sukup Axial Fans

Not all fans are alike. Sukup Axial Fans give the highest airflows at low cost. Sukup high performance axial fans are ideal for lower static pressures found in aeration or in-bin drying. Sukup thoroughly tests all fans and heaters prior to shipping and backs their fans with a two-year warranty on components.

Engineered for High Performance

- Cast aluminum blades produce high airflow efficiently and economically.
- 3500 RPM motors have been specially engineered for Sukup's high-performance blades.

High Efficiency

- All fan blades are precision-balanced for vibration-free operation. The large hub on the blade prevents back leakage of air at higher static pressures.

- Blades are secured to the motor shaft with Trantorque bushings to ensure the most secure attachment, as well as serviceability.

Close Blade Tip Clearance

- Unique square end plates maintain accurate roundness of the housing to allow closer clearance between blade tips and housing.
- Close tip clearance increases airflow by preventing air from blowing back between blade and housing.
- Square end plates also give uniform support around the housing by eliminating legs that concentrate stress and distort the housing.

- Patented built-in venturi (air intake) on 24" and 28" fans increases airflow. (Patent #5,615,850)
- Sturdy handles on 24" and 28" fans make them easier to install and move.
- Plated screen guard bolts over air intake for added safety.
- Galvanized housings resist rust.
- Sukup housings are huck bolted together for more solid, secure assembly. Other companies use common nuts and bolts that can work loose over time.

More Airflow for Your Money

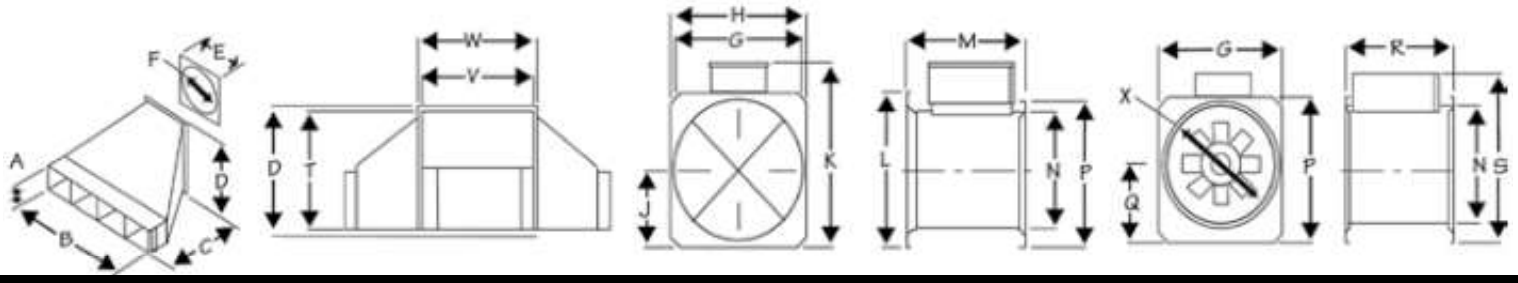

Axial Fan & Heater Dimensions - inches

Dia.	A	B	C	D	E	F	G	H	J	K	L	M	N	P	Q	R	S	T	V	W	X
12"	10-1/4	40-1/4	36	20-1/8	20	12-3/16	14-1/8	14-1/8	7	14-3/4	14-1/8	16-1/8	12-1/8	14-1/8	--	--	--	18-1/4	18	20	--
14"	10-1/4	40-1/4	36	20-1/8	20	14-3/16	16-1/8	16-1/8	8	16-7/8	16-1/8	16-1/8	14-3/16	16-1/8	--	--	--	18-1/4	18	20	--
18"	10-1/4	40-1/4	36	20-1/8	20	18-1/16	17-7/8	19-7/8	10	24-1/2	19-1/8	18-1/4	18-3/16	19-7/8	10	24-1/4	28-1/2	18-1/4	18	20	19-5/8
24"	10-1/4	50-3/4	38	31-1/2	31-1/2	24-1/4	27-5/8	30	16-1/2	38	31-1/2	26-1/2	24-3/16	30-1/8	16-1/2	24-1/4	38	28-1/2	28-1/2	31-1/2	26
24"	11	47	38	31-1/2	31-1/2	24-1/4	--	--	--	--	--	--	--	--	--	--	--	28-1/2	28-1/2	31-1/2	--
28"	10-1/4	55-3/4	38	31-1/2	31-1/2	--	31-5/8	33-5/8	18-1/4	42	35-1/16	26-7/8	28-5/16	34-1/8	18-1/4	24-1/4	41-1/2	38-1/2	28-1/2	31-1/2	29-3/4
28"	11	55-3/4	38	31-1/2	--	--	--	--	--	--	--	--	--	--	--	--	--	28-1/2	28-1/2	31-1/2	--

AXIAL FANS

DIA.	DESCRIPTION	PHASE	VOLTAGE	HP	RPM	WEIGHT	PART #
12"	Axial Fan Wired With Cord	1	115	1	3450	59	D3710
	Axial Fan Wired With Cord	1	230	1	3450	57	D3711
	Axial Fan Wired With Cord	3	230	1	3450	50	D3712
	Axial Fan Wired With Cord	3	460	1	3450	52	D3713
14"	Axial Fan Wired With Cord	1	230	1.5	3450	67	D3721
	Axial Fan Wired With Cord	3	230	1.5	3450	62	D3722
	Axial Fan Wired With Cord	3	460	1.5	3450	60	D3723
18"	Axial Fan With Controls	1	230	3	3450	135	D3741
	Axial Fan With Controls	3	230	3	3450	135	D3742
	Axial Fan With Controls	3	460	3	3450	35	D3743
24"	Axial Fan With Controls	1	230	5-7	3450	215	D3761
	Axial Fan With Controls	3	230	5-7	3450	193	D3762
	Axial Fan With Controls	3	460	5-7	3450	193	D3763
	Axial Fan With Controls	1	230	7-10	3450	213	D3781
	Axial Fan With Controls	3	230	7-10	3450	217	D3782
	Axial Fan With Controls	3	460	7-10	3450	217	D3783

AXIAL FAN TRANSITIONS

FAN DIA.	DESCRIPTION	WEIGHT	PART #
12"	Transition For 12" Axial Fan, 18" Outlet	95	D3687F
14"	Transition For 14" Axial Fan, 18" Outlet	95	D3687G
18"	Transition For 18" Axial Fan	95	D3687H
24"	Transition For 24" Fan	155	D3688
28"	Transition For 28" Axial Fan	130	D3687

Sukup Transitions

Galvanized steel for long life. All seams overlap to prevent air leakage. Special nutserts are attached directly to the sheet metal, making assembly simple and convenient. Transitions that fit between bin stiffeners are available.

FAN COVERS

FAN DIA.	PART #
12"	D3855
14"	D3865
18"	D3875
24"	D3902
28"	D3892

FAN SHUTTERS

FAN DIA.	PART #
18"	D3661
24"	D36691
28"	D36701

PARTS/ASSEMBLIES

12" & 14" AXIAL FAN

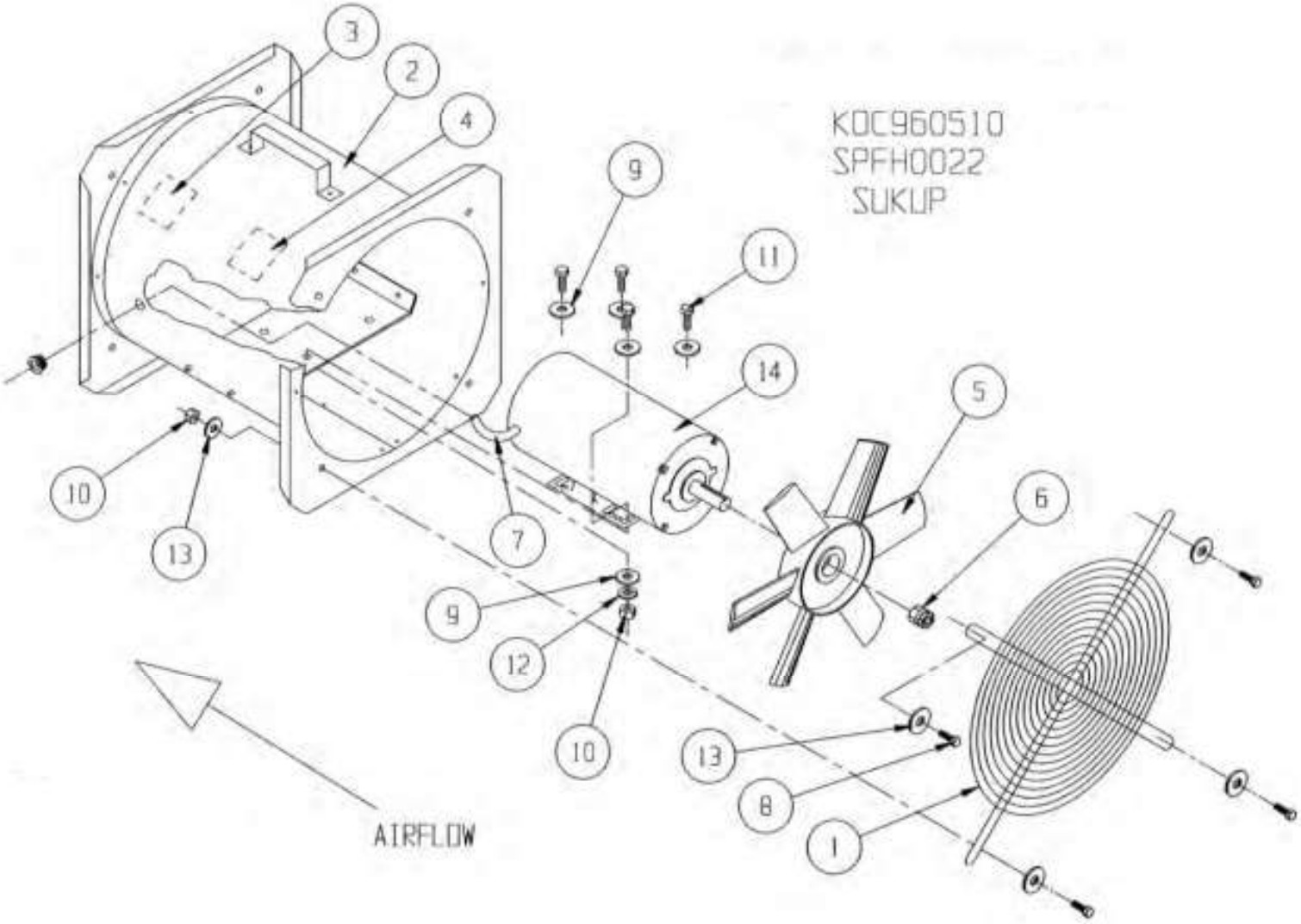

REF #	DESCRIPTION	NOTES	QTY	3450 RPM 12" 3/4HP	12" 1HP	14" 1.5HP
1	Screen Guard		1	D3820	D3820	D3820
2	Fan Housing		1	D3857	D3857	D3858
3	Decal - Safe Operation		1	L0281	L0281	L0281
4	Decal - Discon. Elec, grds, shlds		1	L0166	L0166	L0166
5	Blade w/ Trantorque Bushing		1	D3851	D3864	D3861
	Blade w/ Trantorque Bushing, 7/8"		1	-----	-----	D3862
6	Trantorque Bushing, 5/8"			J0429	J0429	J0429
	Trantorque Bushing, 7/8"			-----	-----	J0414
7	Cord Assembly, 1PH 115V		1	D7490C	D7490C	-----
	Cord Assembly, 1PH 230V			D7491	D7491	D7495
	Cord Assembly, 3PH 230V			D7492	D7492	D7497
	Cord Assembly, 3PH 460V			D7493	D7493	D7498
	Heyco Bushing	b	1	J50056	J5005	J5005
	Plastic Tubing	b	1	K5206	K5206	K5206
	4' Cord only, 1PH 115V/230V	b	1	D3852C	D3852C	D3852C
	4' Cord Only, 3PH 230V/460V	b	1	D3853	D3853	D3853
	1/2" Electrical Connector	b	1	J4079	J4079	J4079
	115V Plug Only	b,c		J3735	J3735	J3735
8	Bolt, 5/16 x 1", Truss Head		4	J0528	J0528	J0528
9	Flat Washer, 5/16"		8	J1111	J1111	J1111
10	Nut, 5/16"		8	J1002	J1002	J1002
11	Bolt, 5/16 x 1" Gr5		4	J0527	J0527	J0527
12	Lock Washer, Split, 5/16"		4	J1200	J1200	J1200
13	Flat Washer, 3/8"		8	J1117	J1117	J1117
14	Motor, 1PH 5/8" Shaft		1	H0700	H1000	H1605
	Motor, 3PH 5/8" Shaft			H0950	H1050	-----
	Motor, 3PH 7/8" Shaft			-----	-----	H1900
Decals:						
	Airflow Sticker	b	1	L0403	L0403	L0403
	Rotation Sticker	b	1	L0292	L0292	L0292
	Sukup Logo Sticker	b	1	L03161	L03161	L03161
	Serial #	b	1	L0383	L0383	L0383
	Voltage Decal 115V 1PH	b	1	L0126	L0126	L0126
	Voltge Decal 230V 1PH	b	1	L0127	L0127	L0127
	Voltage Decal 230V 3PH	b	1	L0107	L0107	L0107
	Voltage Decal 460V 3PH	b	1	L0128	L0128	L0128

NOTES:
b - Not Shown
c - For control circuits above 250volts

18" - 44" AXIAL FAN

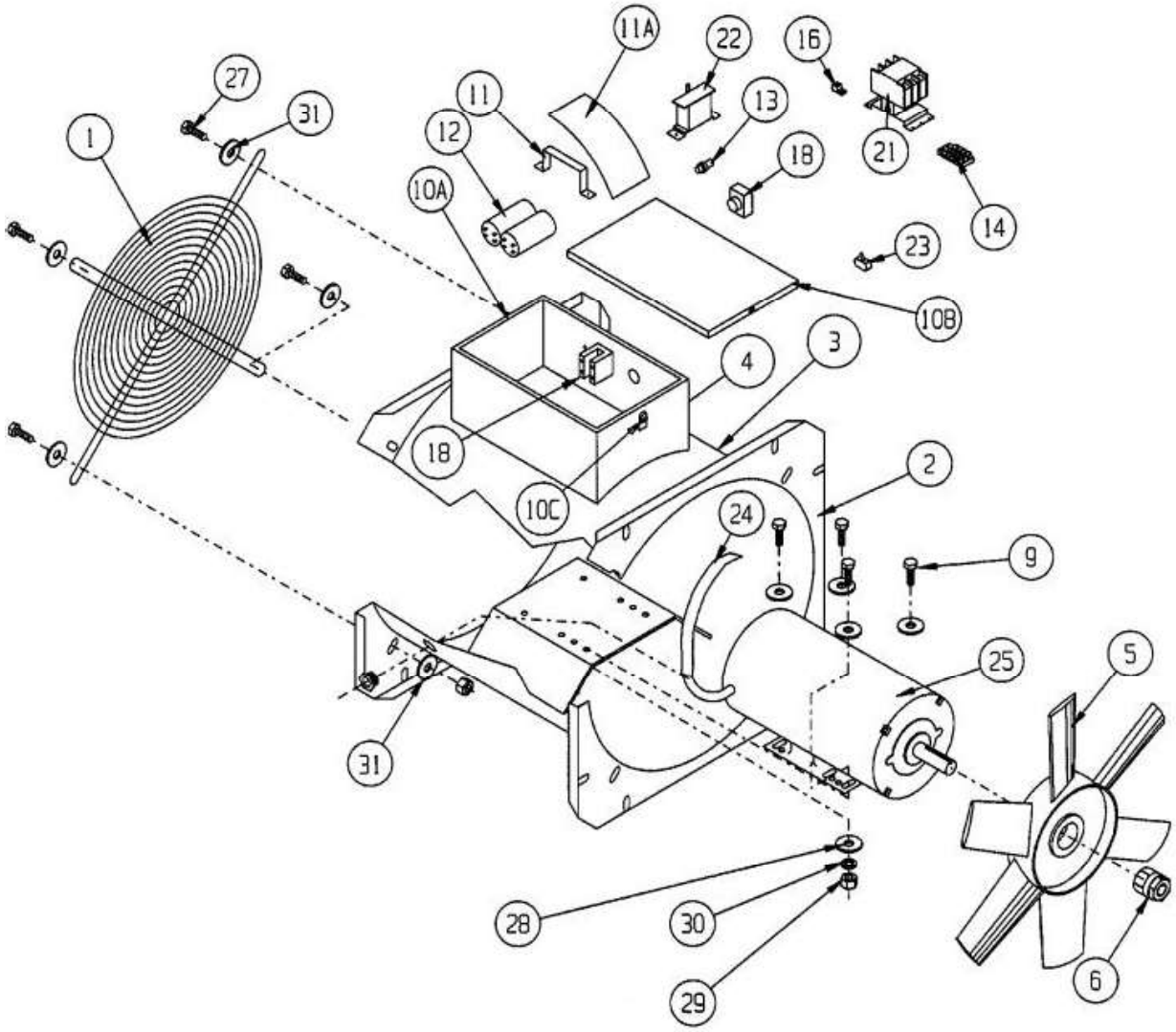

				3450 RPM					1750 RPM	
REF #	DESCRIPTION		QTY	18" 2HP	18" 3HP	24" 5-7HP	24" 7-10HP	28" 10-15HP	38" 10-17HP	44" 30HP
1	Screen Guard		1	D3820	D3820	D3820	D3823	D3823	J3132	J2957
2	Fan Housing - Galv. 1PH		1	D3867	D3867	D3882	D3882	D3885	D5210	T20980
	Fan Housing - Galv. 3PH			-----	-----	-----	-----	-----	D5211	-----
3	Decal - Safe Operation		1	L0281	L0281	L0281	L0281	L0281	L0281	L0281
4	Decal - Fan Safety		1	L0166	L0166	L0166	L0166	L0166	L0166	L0166
5	Blade w/ Trantorque Bushing (7/8)	f	1	D3874	D3871	D3886	D3881	-----	-----	-----
	" " " (1-1/8")		1	-----	-----	D38861	D38861	D3891		
	" " " (1-5/8")		1	-----	-----	-----	-----	-----	T12175	-----
	Blade w/ Taper Lock Bush. (1-7/8")		1	-----	-----	-----	-----	-----	-----	J3067
6	Trantorque Bushing (7/8")	f	1	J0414	J0414	J0414	J0414	-----	-----	-----
	" " " (1-1/8")		1	-----	-----	J0436	J0436	J0436	-----	-----
	'' " " (1-5/8")		1	-----	-----	-----	-----	-----	J0435	-----
	Taper Lock Bushing (1-7/8")		1	-----	-----	-----	-----	-----	-----	J04284
9	Bolt, 5/16" x 1" GR5		4	J0527	J0527	J0527	J0527	J0527	-----	-----
	Bolt, 7/16" x 2" GR5		4	-----	-----	-----	-----	-----	J0718	J0718
10	Electrical Components 1ph 230V	i	1	D8501	D8501	D8505	D8506	D8506	D8509	-----
	3ph 230V		1	D8510	D8510	D8514	D8515	D8515	D8518	D85171
	3ph 460V		1	D8519	D8519	D8524	D8524	D8524	D85181	D85172
10A	Contol Box Only		1	D3842	D3842	D3841	D3841	D3841	D3841	D3841
10B	Lid Only		1	D3845	D3845	D4500	D4500	D4500	D4500	D4500
10C	Latch		1	J2310	J2310	J2310	J2310	J2310	J2310	J2310
11	Capacitor Holder (1ph only)		1	-----	-----	-----	D3833	D3833	D3832	-----
	" " " Sq.D		1	-----	-----	-----	-----	-----	D3833	-----
	Protective Foam Strip		1	-----	-----	-----	D8506-01	D8506-01	D8506-01	D8506-01
	Capacitors (full name plate info req)		1	-----	-----	-----	-----	-----	-----	-----
13	Fuse Holder (38" & 44" uses 2)	a	1	-----	-----	J4660	J4660	J4660	J4660	J4660
	Fuse, 3 amp (38" & 44" uses 2)	ab	1	-----	-----	J4667	J4667	J4667	J4667	J4667
	Fuse, 2 amp for 3ph, 460V	ab	1	-----	-----	J4666	J4666	J4666	J4666	-----
14	Heater Block	a	1	-----	-----	D65073	D65073	D65073	-----	-----
16	Ground Block	a	1	J4049	J4049	J4049	D4049	J4049	J4049	J4049
18	Start/Stop Button	ag	1	J4482	J4482	J4482	J4482	J4482	-----	-----
	Start Button for 38" & 44"		1	-----	-----	-----	-----	-----	J4485	J4485
	Pushbutton Cover		1	-----	-----	-----	-----	-----	J4500	J4500
21	Magnetic Contactor (see next pg)	ag	1							
22	Overload Relay (see next pg)	a	1							
23	Accesory Contact (see next pg)	ad	1							
25	Motor - 1ph (7/8" Shaft)		1	H2000	H2945	H4390	H5020	-----	-----	-----
	Motor - 1ph (1-1/8" Shaft)		1	-----	-----	H4395	H5022	H5760	-----	-----
	Motor - 1ph (1-5/8" Shaft)		1	-----	-----	-----	-----	-----	H5755	-----
	Motor - 3ph (7/8" Shaft)		1	H2050	H3000	H4425	H5050	-----	-----	-----
	Motor - 3ph (1-1/8" Shaft)		1	-----	-----	H4430	H5055	H5775	-----	-----
	Motor - 3ph (1-5/8" Shaft)		1	-----	-----	-----	-----	-----	H6275	-----
	Motor - 3ph (1-7/8" Shaft)		1	-----	-----	-----	-----	-----	-----	H7125

GALVANIZED CENTRIFUGAL FANS (*STANDARD 1750 RPM*)

- Heavy Duty, ODP Motors Are Standard. Explosion-Proof Motors Are Available, Call for Pricing
- Part #'s That Are Bold Are Typically Stocked At Sukup and Are Most Popular

CENTRIFUGAL FANS (Standard 1750 RPM)						
					WITH CONTROLS	WITHOUT CONTROLS
HP	NOTE*	PHASE	VOLTAGE	LBS	PART #	PART #
3	(a)	1	230	420	D0101	D0102
	(a,f)	3	230	395	D0121	D0122
	(a,f)	3	460	395	D0141	D0122
5	(a,e)	1	230	510	D0301	D0302
	(a,e,f)	3	230	500	D0321	D0322
	(a,e,f)	3	460	500	D0341	D0322
7 1/2	(a)	1	230	590	D0501	D0502
	(a,f)	3	230	575	D0521	D0522
	(a,f,g)	3	460	575	D0541	D0522
10	(a)	1	230	639	D0701	D0702
	(a,f,g)	3	230	600	D0721	D0722
	(a,f,g)	3	460	600	D0741	D0722
15	(a,b)	1	230	725	D0901	D0902
	(a,f)	3	230	700	D0921	D0922
	(a,f)	3	460	700	D0941	D0922
20	(a,f)	3	230	770	D1121	D1122
	(a,f)	3	460	770	D1141	D1122
30S	(a,d,f)	3	230	938	D1351	D1353
	(a,d,f)	3	460	938	D1352	D1353
40S	(a,h)	3	230	1110	D1451	D1453
	(a,h)	3	460	1110	D1452	D1453
50S	(a,h,l,k)	3	230 /460	1550	---	D1586
60S	(a,h,l,k)	3	230 /460	1994	---	D1960
75S	(a,h,l,k)	3	230 / 460	2380	---	D1970
100S	(a,h,l,k)	3	230 / 460	2605	---	D1980
30D	(c.f)	3	230	1100	D1321	D1342
	(c,f)	3	460	1110	D1341	D1342
40D	(c.f)	3	230	1250	D1421	D1442
	(c,f)	3	460	1250	D1441	D1442
50D	(c.f)	3	230	1460	---	D1482
	(c,f)	3	460	1460	D1481	D1482

*NOTES:
(a) Single Inlet
(b) 389 Locked rotor amps, 65 FLA
(c) Double inlet fans
(d) Fits 20hp heater & transition, with adapter kit D1400 for 25hp and adapter D3263 for 30hp
(e) To use with heater: order fan w/controls and: Interlock circuit for 230v fan D4595, for 460V fan, D4596
(f) If a phase converter is used: Order fan **less** controls and have electrician provide controls to match phase converter
(g) 10hp, 3ph motor nameplate is 12.5hp, 1.0 SF (was 10hp, 1.25SF)
(h) Downstream heater not available
(i) For flush aeration only
(j) Available with Toshiba motor. For 60S order D1960T, for 75S order D1970T, for 100S order D1980T
(k) TEFC motors in lieu of standard ODP

1750 RPM CENTRIFUGAL FAN ACCESSORIES

STANDARD TRANSITION & SHUTTERS

	STANDARD TRANSITION w/ ENTRANCE COLLAR (Unassembled)			HEAVY-DUTY FAN SHUTTERS	
FAN HP	DIMENSIONS(b)	LBS	PART #	PART #	NOTE
3	11" x 45"	170	D3255A	D31801	
5	11" x 45"	170	D3255B	D31801	
7 1/2	11" x 45"	170	D3255N	D31801	d
10	11" x 45"	170	D3255P	D31801	d
15	11" x 45"	170	D3255R	D31801	d
20	11" x 45"	170	D3255S	D31801	e
30S	11" x 45"	150	D3255	D31801	e
40S	11" x 45"	150	D3295	D329601	
100S	------	---	---	D19803	
30D (a) - 50D	14-1/4" x 100-1/4"	280	D3206	D31071	c

NOTES:
(a) D3206 tansition entrance collar height is 14", to reduce it to 10.5" order adapter D3209
(b) Entrance Collar Outlet Dimensions
(c) Low volume item - subject to extended lead time
(d) When using with a downstream heater, use D31551 shutter in lieu of D31801
(e) When using with a downstream heater, use D31571 shutter in lieu of D31801

COMMERCIAL FLUSH FLOOR TRANSITION & TRANSITION INSERT

	FLUSH FLOOR TRANSITION	
FAN HP	LBS	PART #
3	162	D3256A
5	162	D3256B
7 1/2	162	D3256C
10	162	D3256D
15	162	D3256E
20	162	D3256F
30S	152	D3256
40S	160	D3460
50S	175	D3480
60S	275	D3401B
75S	272	D3401A
100S	258	D3401

FLUSH FLOOR TRANSITION INSERT

FLUSH FLOOR TRANSITION INSERT (D5720 shown)

NOTE: Inserts are uncoated bare metal.

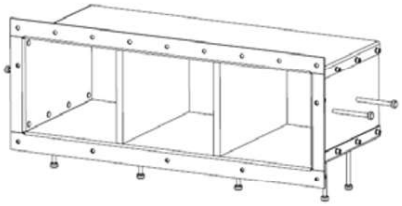

DIMENSIONS	LBS	PART #
44" L X 13.5" W X 16" D	191	D5716
44" L X 13.5" W X 18" D	213	D5718
44" L X 13.5" W X 20" D	272	D5720
44" L X 13.5" W X 24" D	324	D5724

CENTRIFUGAL FAN CABLE SUSPENSION KIT

3 HP		5 HP		7 - 20 HP		30 - 50 HP	
LBS	PART #	LBS	PART #	LBS	PART #	LBS	PART #
44	D6171	55	D6174	52	D6175	54	D6176

NOTES:
- Kit Includes: Brackets, Turnbuckles Cable & Hardware
- Must use transition beginning with D3255 for this application

NOISE SUPPRESSION KITS

7.5 - 15 HP		20 - 40 HP		50 HP	
LBS	PART #	LBS	PART #	LBS	PART #
340	T80461	470	T80460	627	T80462

NOTES:
- Not available for 3 - 5 HP
- Two kits required for double inlet fans (30D, 40D, 50D)

SUKUP CENTRIFUGAL FAN PARTS / ASSEMBLIES

Use For 1750 & 3500 RPM FANS

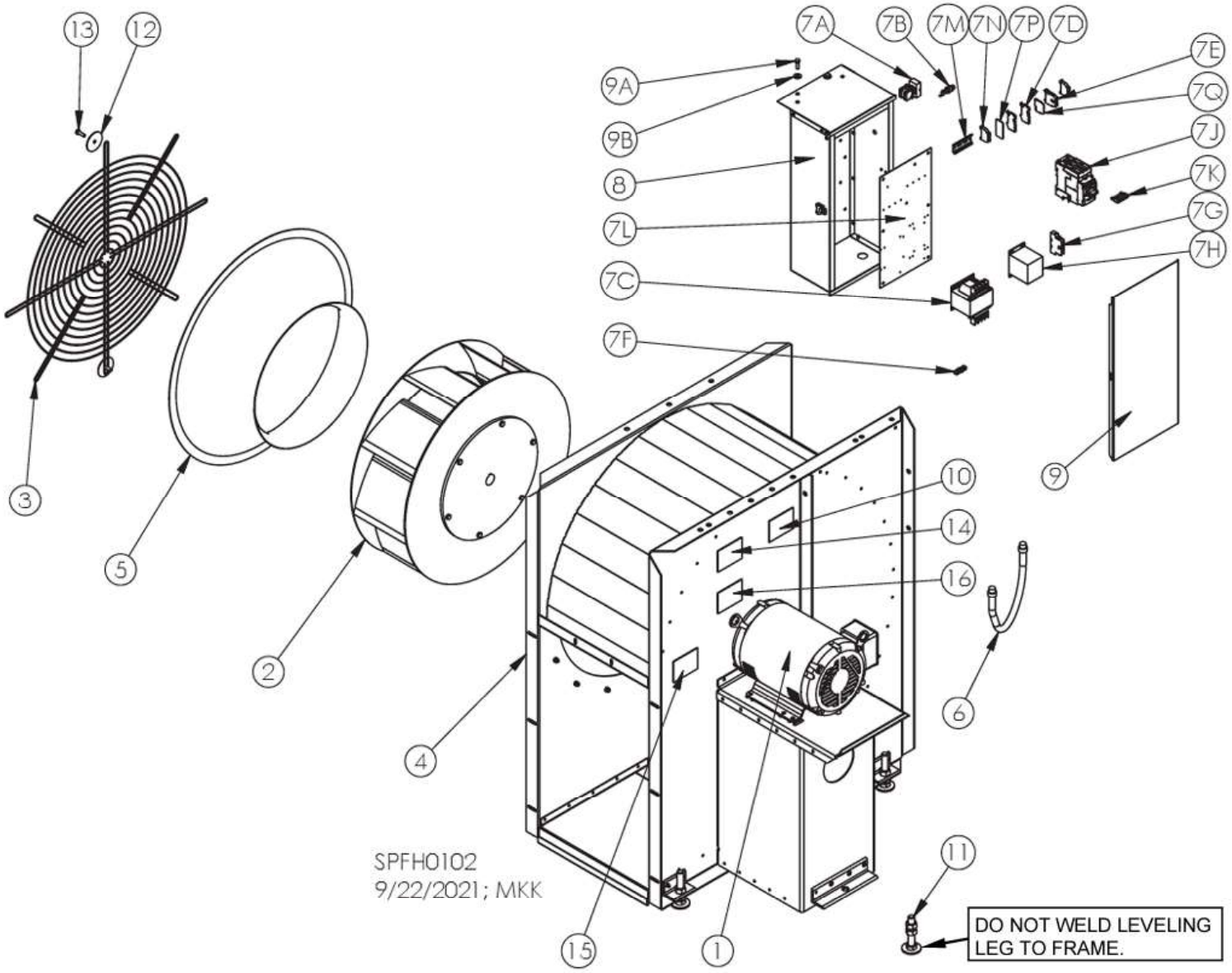

PARTS FOR 1750 RPM SINGLE-INLET FAN

REF. #	DESCRIPTION	NOTE	3HP	5HP	7.5HP	10HP	15HP	20HP	25HP	30HP	40HP	50HP	60HP	75HP	100HP
1	Motor, ODP, 1ph		H2885	H3790	H4625	H5175	H6030	--	--	--	--	--	--	--	--
	Motor, ODP, 3ph		H3245	H4110	H4800	H5475	H6277	H6801	H7110	H7125	H7175	H7205	--	--	--
	Motor, TEFC, 1ph		H2845	H3675	H4900	H5302	--	--	--	--	--	--	--	--	--
	Motor, TEFC, 3ph		H3345	H4190T	H4910T	H5310T	H6110T	H6610T	H7100	H7126	H7200T	H7210	H7260	H7505	H7510
2	Fan wheel w/ hub	a	D0220	D0420	D0620	D0820	D1020	D1220	D1250	D1370	D1418	J3178	D19602	D19702	D19801
	Setscrew, sq. hd.	b	J1385	J1385	J1385	J1385	J1385	J1385	J1385	J1385	J1385	J1385	J07912	J07912	J07912
3	Screen guard		D3160	D3160	D3162	D3162	D3162	D3164	D3164	D3164	D3164	J2976	D19801-21	D19801-21	D19801-21
4	Fan housing, galvanized		D0214	D0414	D0614	D0814	D1014	D1209	D1235	D1313	D1460	D1580	D19601	D19701	D19801
5	Venturi		D0475	D0475*	D0675	D0875	D0875	D1275	D1275	Q84612	Q84612	J3146	J3148	J3148	J3148
6	Conduit w/ wires, 1ph, 230V	c	D6650	D6656	D6662	D6662	D6665	--	--	--	--	--	--	--	--
	" " 3ph 230V	c	D6651	D6657	D66571	D6663	D6669	D66691	D66691	D66731	D6693C	--	--	--	--
	" " 3ph 460V	c	D6654	D6660	D66601	D66601	D6666	D6670	D66691	D66741	D66742	D6679	--	--	--
7	Cntrl box, cmpl.,1ph 230V	cd	D6530U	D6531U	D6532U	D6532U	D6533U	--	--	--	--	--	--	--	--
	Cntrl box, cmpl., 3ph 230V	cd	D6536U	D6537U	D6538U	D6539U	D6581U	D6582U	D65822U	D6541U	D6543U	--	--	--	--
	Cntrl box, cmpl., 3ph 460V	cd	D6588U	D6589U	D6547U	D6552U	D6586U	D6548U	D65484U	D65493U	D65503U	D65502U	--	--	--
7A	Start-Stop switch w/ wires	c	D65141U	D6514U	D6514U	D6514U	D6514U	D6514U	D6514U	D6514U	D6514U	D6514U	--	--	--
7B	Fuse holder	c	--	--	J4660	J4660	J4660	J4660	J4660	J4660	J4660	J4660	--	--	--
	Fuse only, 3 amp	c	--	--	J4667	J4667	J4667	J4667	J4667	J4667	J4667	J4667	--	--	--
7C	Transformer	ce	--	--	J4907	J4907	J4907	J4907	J4907	J4907	J4903	J4903	--	--	--
7D	Heater terminal block	c	--	--	J6915	J6915	J6915	J6915	J6915	J6915	J6915	J6915	--	--	--
7E	Neutral terminal block	c	--	--	J67421	J67421	J67421	J67421	J67421	J67421	J67421	J67421	--	--	--
7F	Ground bar, 4-hole, alum.	c	--	--	J47904	J47904	J47904	J47904	J47904	J47904	J47904	J47904	--	--	--
7G	Aux. contact, See Next Pages	c													
7H	Contactor, See Next Pages	c													
7J	Circ. breaker, See Next Pages	c													
7K	CB aux. cont., See Pg 26	c													
7L	Mounting plate	c	--	--	D64071	D64071	D64071	D64071	D64071	D64071	D64071	D64071	--	--	--
7M	Rail	c	--	--	J6718	J6718	J6718	J6718	J6718	J6718	J6718	J6718	--	--	--
7N	End block	c	--	--	J6754	J6754	J6754	J6754	J6754	J6754	J6754	J6754	--	--	--
7P	End cover	c	--	--	J6916	J6916	J6916	J6916	J6916	J6916	J6916	J6916	--	--	--
7Q	End cover 2	c	--	--	J67532	J67532	J67532	J67532	J67532	J67532	J67532	J67532	--	--	--
8	Control box only	c	--	--	D6409U	D6409U	D6409U	D6409U	D6409U	D6409U	D6409U	D6409U	--	--	--
9	Control box lid only	c	--	--	D64081	D64081	D64081	D64081	D64081	D64081	D64081	D64081	--	--	--
9A	Screw, 5/16 - 18 x 1"		--	--	J0527	J0527	J0527	J0527	J0527	J0527	J0527	J0527	--	--	--
9B	Flat washer, 5/16"		--	--	J1111	J1111	J1111	J1111	J1111	J1111	J1111	J1111	--	--	--
10	Decal, Disconnect elec. ...		L0166	L0166	L0166	L0166	L0166	L0166	L0166	L0166	L0166	L0166	L0166	L0166	L0166
11	Leveling leg		D9006	D9006	D9006	D9006	D9006	D9006	D9006	D9006	D9006	D9006	D9006	D9006	D9006
12	Washer, 2-1/2" OD, 3/8" ID		D1494	D1494	D1494	D1494	D1494	D1494	D1494	D1494	D1494	D1494	D1494	D1494	D1494
13	Screw, 5/16 x 1"		J0527	J0527	J0527	J0527	J0527	J0527	J0527	J0527	J0527	J0527	J0527	J0527	J0527
14	Decal, Safe Operation		L0281	L0281	L0281	L0281	L0281	L0281	L0281	L0281	L0281	L0281	L0281	L0281	L0281
15	Decal, Warning, Moving ...		(L0284 on belt drive)												
16	Decal, Danger, Shield ...		(L0271 on belt drive)												

ODP – Open drip proof **TEFC – Totally enclosed, fan cooled**

a: Includes indented parts that follow
b: Not shown on drawing
c: Not included on fans less controls
d: Includes connecting wires w/ terminals
e: Used only with 460V fan with 115V control conduit

HIGH SPEED 3500 RPM GALVANIZED CENTRIFUGAL FANS

- All motors are totally enclosed, fan cooled (TEFC)
- For 208V or explosion-proof motors, call for pricing

CENTRIFUGAL FANS (High Speed 3500 RPM)					
				WITH CONTROLS	WITHOUT CONTROLS
HP	PHASE	VOLTAGE	LBS	PART #	PART #
3	1	230	254	D9005	D9010
	3	230	229	D9015	D9020
	3	460	229	D9016	D9020
5	1	230	267	D9055	D9060
	3	230	249	D9065	D9070
	3	460	249	D9066	D9070
7 1/2	1	230	320	D9105	D9110
	3	230	338	D9115	D9120
	3	460	338	D9116	D9120
10	1	230	350	D9155	D9160
	3	230	400	D9165	D9170
	3	460	400	D9166	D9170
15	3	230	450	D9215	D9220
	3	460	450	D9216	D9220
20	3	230	565	D9265	D9270
	3	460	565	D9266	D9270
30	3	230	700	D9315	D9320
	3	460	700	D9316	D9320
40	3	230	980	D9365	D9370
	3	460	980	D9366	D9370
50	3	230	1155	-----	D9420
	3	460	1155	-----	D9420
60	3	230	1305	-----	D9470
	3	460	1305	-----	D9470

	TRANSITION w/ COLLAR (Unassembled) Assembled: 11" X 45"	HEAVY-DUTY FAN SHUTTERS	COMMERCIAL FLUSH-FLOOR TRANSITION
HP	PART #	PART #	PART #
3	D3255C	D31801	D3256H
5	D3255D	D31801	D3256J
7 1/2	D3255E	D31801	D3256K
10	D3255F	D31801	D3256L
15	D3255G	D31801	D3256M
20	D3255H	D31801	D3256N
30	D3255J	D31801	D3256P
40	D3255K	D31801	D3256R
50	D3255L	D31801	D3256S
60	D3255M	D31801	D3256T

FLUSH FLOOR TRANSITION INSERT

FLUSH FLOOR TRANSITION INSERT (D5720 shown)

NOTE: Inserts are uncoated bare metal.

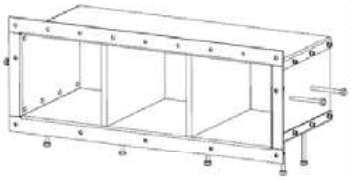

DIMENSIONS	LBS	PART #
44" L X 13.5" W X 16" D	191	D5716
44" L X 13.5" W X 18" D	213	D5718
44" L X 13.5" W X 20" D	272	D5720
44" L X 13.5" W X 24" D	324	D5724

HIGH SPEED 3500 RPM GALVANIZED CENTRIFUGAL FANS (*cont'd*)

CENTRIFUGAL FAN CABLE SUSPENSION KIT

3 -5 HP		7 - 30 HP		40 - 60 HP	
LBS	PART #	LBS	PART #	LBS	PART #
43	D6170	43	D6171	55	D6174

NOTES:
- Kit Includes:
  Brackets, Turnbuckles Cable & Hardware

NOISE SUPPRESSION KITS

5HP, 10-20 & 30 HP		40 - 60 HP	
LBS	PART #	LBS	PART #
340	T80461	470	T80460

NOTES:
- Not available for 3HP or 7.5 HP

IN-LINE CENTRIFUGAL FANS

IN-LINE

CENTRIFUGAL FANS (IN-LINE)						
					WITH CONTROLS	WITHOUT CONTROLS
Diamter	HP	PHASE	VOLTAGE	LBS	PART #	PART #
18"	4.5	1	230	140	D9490	D9491S
		3	230	140	D9492	D9495S
		3	460	140	D9494	D9495S
24"	5-7	1	230	260	D9510	D9513S
		3	230	260	D9511	D9512S
		3	460	260	D9518	D9512S
24"	7-10	1	230	280	D9527	D95271S
		3	230	280	D95281	D95284S
		3	460	280	D95282	D95284S
28"	10-15	1	230	310	D9530	D95301S
		3	230	310	D9531	D9534S
		3	460	310	D9532	D9534S

	STANDARD TRANSITION w/ ENTRANCE COLLAR (Unassembled)			HEAVY-DUTY FAN SHUTTERS
FAN HP	DIMENSIONS(b)	LBS	PART #	PART #
18"	11" x 45"	155	D3687H	D3687H
24"	11" x 45"	155	D3688	D3688
28"	11" x 45"	150	D3687	D3687

AIRFLOW FOR IN-LINE CENTRIFUGAL FANS - C

STATIC PRESSURE - INCHES OF WATER										
DIA.	HP	0	1	2	3	4	5	6	7	8
18"	4.5	4,450	3,970	3,480	3,060	2,630	1,890	1,075		
24"	5-7	6,370	6,100	5,815	5,480	5,150	4,935	4,715	4,375	3,935
24"	7-10	7,645	7,240	6,830	6,540	6,245	5,835	5,440	5,170	4,470
28"	10-15	9,440	8,850	8,320	7,850	7,450	7,110	6,810	6,540	6,260

SUKUP CENTRIFUGAL FAN PARTS / ASSEMBLIES

Use For 1750 & 3500 RPM FANS

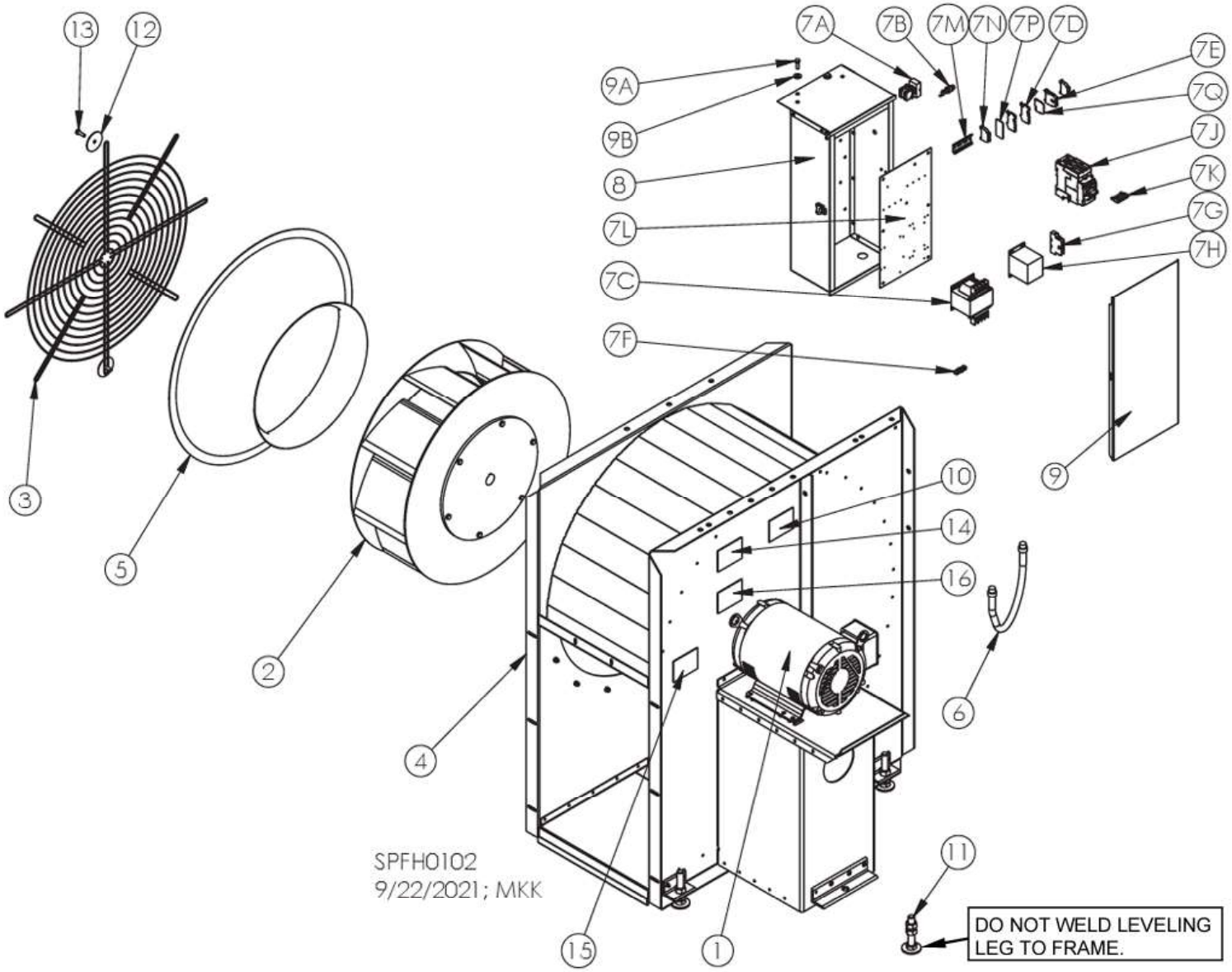

PARTS FOR 3500 RPM SINGLE-INLET FAN

REF. #	DESCRIPTION	NOTE	3HP	5HP	7.5HP	10HP	15HP	20HP	30HP	40HP	50HP
1	Motor, TEFC, 1ph		H3100	H3900	H4700	H5400	--	--	--	--	--
	Motor, TEFC, 3ph		H3150	H3950	H4750	H5450	H6250	H6775	H7350T	H7400	H7450
2	Fan wheel w/ hub	a	D9001	D9051	D9099	D9151	D9201	D9253	D9301	D9351	D9401
	Setscrew, 1/2 – 13 x 1-3/4", sq. hd.	b	J1385	J1385	J1385	J1385	J1385	J1385	J1385	J1385	J1385
3	Screen guard		D9003	D9003	D9103	D9103	D9103	D3160	D3160	D3160	D3162
4	Fan housing, galvanized		D9039	D9049	D9109	D9149	D9199	D9249	D9299	D9349	D9398
5	Venturi		D9004	D9004	D9104	D9104	D9104	D0475	D0475	D0475	D9405
6	Conduit w/ wires & fittings, 1ph	c	D6652	D6658	D66581	D66582	--	--	--	--	--
	" " " 3ph 230V	c	D6653	D6659	D6659	D6664	D6667	D6671	D6675	D6678	D6680
	" " " 3ph 460V	c	D6655	D6655	D6661	D6654	D6668	D6672	D6676	D6683	D6682
7	Control box, complete, 1ph 230V	cd	D6530U	D6531U	D65312U	D65312U	--	--	--	--	--
	Control box, complete, 3ph 230V	cd	D6536U	D6537U	D6580U	D6540U	D65831U	D6583U	D6542U	D6544U	D6546U
	Control box, complete, 3ph 460V	cd	D6588U	D65893U	D6590U	D6591U	D6592U	D6553U	D65541U	D6555U	D65551U
7A	Start-Stop switch w/ wires	c	D65141U	D65141U	D65141U	D65141U	D65141U	D65141U	D65141U	D65141U	D6514U
7F	Ground bar, 4-hole, alum.	c	J47904	J47904	J47904	J47904	J47904	J47904	J47904	J47904	J47904
7G	Auxiliary contactor, See Next Pages	c									
7H	Contactor, See Next Pages	c									
7J	Circuit breaker, See Next Pages	c									
7K	Circ. brkr. aux. cont., See Next Pages	c									
7L	Mounting plate	c	D65721	D65721	D65721	D65721	D65721	D65721	D65721	D65721	D64071
8	Control box only	c	D6405	D6405	D6405	D6405	D6405	D6405	D6405	D6405	D6409U
9	Control box lid only	c	D6406	D6406	D6406	D6406	D6406	D6406	D6406	D6406	D64081
9A	Screw, 5/16 - 18 x 1"		J0527	J0527	J0527	J0527	J0527	J0527	J0527	J0527	J0527
9B	Flat washer, 5/16"		J1111	J1111	J1111	J1111	J1111	J1111	J1111	J1111	J1111
10	Decal, Disconnect elec. ...		L0166	L0166	L0166	L0166	L0166	L0166	L0166	L0166	L0166
11	Leveling leg		D9006	D9006	D9006	D9006	D9006	D9006	--	--	--
12	Washer, 2-1/2" OD, 3/8" ID		D1494	D1494	D1494	D1494	D1494	D1494	D1494	D1494	D1494
13	Screw, 5/16 x 1"		J0527	J0527	J0527	J0527	J0527	J0527	J0527	J0527	J0527
14	Decal, Safe Operation		L0281	L0281	L0281	L0281	L0281	L0281	L0281	L0281	L0281
15	Decal, Warning, Moving ...		(L0284 on belt drive)								
16	Decal, Danger, Shield ...		(L0271 on belt drive)								

TEFC – Totally enclosed, fan cooled

a: Includes indented parts that follow
b: Not shown on drawing
c: Not included on fans less controls
d: Includes connecting wires w/ terminals
e: Used only with 460V fan with 115V control conduit

ELECTRICAL COMPONENTS IDENTIFICATION FOR UL-LISTED FANS

Images below identify components in control boxes for centrifugal fans. Components will vary by fan size and speed. See tables below and on next page for identification of contactor, circuit breaker and auxiliary contactor components.

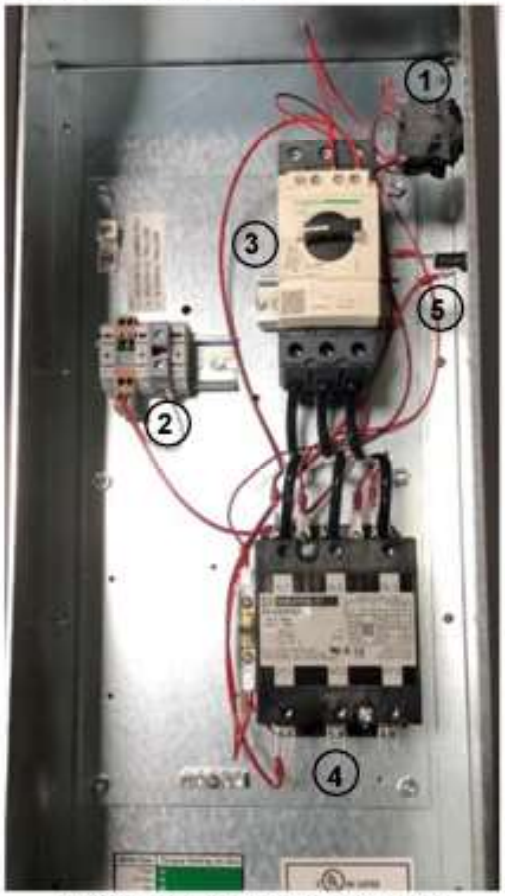

230V centrifugal fan UL box

Fan Electrical Controls

1. Start-Stop switch
2. Terminals
3. Circuit breaker
4. Contactor
5. Fuse
6. Transformer

460V centrifugal fan UL box

FAN SIZE (BY MOTOR HP)			CONTACTOR PART #	AUX CONTACTOR PART #
1PH 230V	3PH 230V	3PH 460V		
3,3T,5,5T,7.5T	3-10,3-10T	--	J52502	J52605
--	--	3-20,3T-25T	J52542	J52605
7.5,10,10T	15,15T	--	J5251M	J5260
15	20,20T,25,25T	--	J5252M	J5260
--	30,30T,40	--	J6071	--
--	--	25,30,30T	J5255M	J5260
--	40T,50,50T	--	J6072	--
--	--	40,40T,50,50T	J5256M	J5260
Contactors & auxiliary contactors for 1750 rpm fans				

FAN SIZE (BY MOTOR HP)			CIRCUIT BREAKER PART #	AUX CONTACTOR PART #
1PH 230V	3PH 230V	3PH 460V		
3,3T, 5T	5T,7.5T	15,15T	J5238	J5265
--	3,3T	5,5T	J5236	J5265
--	--	3,3T	J5234	J5265
5	7.5,10T	20,20T	J5239	J5265
--	5	10,10T	J5243	J5265
7.5,10T	15,15T	30,30T	J52422	J5265
--	--	7.5,7.5T	J5237	J5265
7.5T	10	25,25T	J52423	J5265
15	25,25T	50,50T	J52425	J5265
10	20,20T	40,40T	J52421	J5265
--	30,30T,40T	--	J5235	J5263
--	40,50,50T	--	J5241	J5263
Circuit breakers & auxiliary contactors for 1750 rpm fans				

"T" indicates fan with TEFC (Totally Enclosed, Fan-Cooled) motor.

FAN SIZE (BY MOTOR HP)			CONTACTOR PART #	AUX CONTACTOR PART #
1PH 230V	3PH 230V	3PH 460V		
3,5	3,5,7.5,10	--	J52502	J52605
--	--	3,5,7.5,10,15,20	J52542	J52605
7.5,10	15,20	--	J5251M	J5260
--	30	--	J5252M	J5260
--	40	--	J6071	--
--	--	30,40	J5255M	J5260
--	50	--	J6072	--
--	--	50	J5256M	J5260
Contactors & auxiliary contactors for 3500 rpm fans				

FAN SIZE (BY MOTOR HP)			CIRCUIT BREAKER PART #	AUX CONTACTOR PART #
1PH 230V	3PH 230V	3PH 460V		
3	7.5	15	J5238	J5265
--	3	5	J5236	J5265
--	--	3	J5234	J5265
5	10	20	J5239	J5265
--	5	10	J5243	J5265
7.5,10	15	30	J52422	J5265
--	--	7.5	J5237	J5265
--	20	40,50	J52421	J5265
--	30,40	--	J5235	J5263
--	50	--	J5241	J5263
--	3	5	J5236	J5265
Circuit breakers & auxiliary contactors for 3500 rpm fans				

GSI Roof Vents

PART #	DESCRIPTION
MIS-6782	Slimline Auto-Vent w/ Flap (Assembled)
MIS-6783	Slimline Auto-Vents w/ Flaps (Unassembled) - Box of 5
MIS-6786	Slimline Wire Grill Roof Vent (Assembled)
MIS-6787	Slimline Wire Grill Roof Vents (Unassembled) - Box of 5
MIS-6959	Cricket - 30° Roof Vent Trash Diverters
MIS-6969	Cricket - 30° Roof Vent Trash Diverters - Box of 5

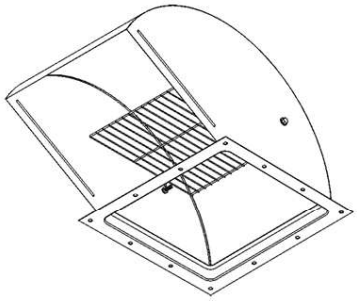

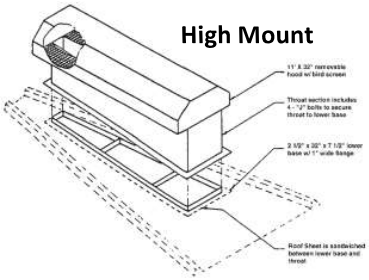

Sukup Roof Vents

PART #	DESCRIPTION
D3971P	Tapered Poly Roof Vent w/ Screen
D3936P9	90° Poly Roof Vent w/ Screen
D3936P4	Screen Cover For Poly Vents

POLY ROOF VENTS

- Exclusive poly roof vents (Patent #D788,904) are virtually indestructible and features a built in debris deflector to prevent fines and dirt from accumulating on the upper side of the vent and causing corrosion of the roof sheet
- Poly vents are covered by a 5-year limited warranty
- The tapered poly vent mounts near the peak of the bin allowing moisture from that area to escape

Sukup Roof Exhauster

ROOF EXHAUSTER FAN
Includes: Totally-enclosed 1750rpm motor, fan blade, shutters & galvanized housing. (10,000 CFM at 0 Static Pressure.)

D6995

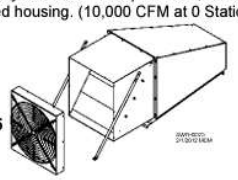

PART #	DESCRIPTION
D3933	24" 2 HP 1PH
D3934	24" 2 HP 3PH
D3932	24" 2HP 3PH w/ explosion proof motor
D6995	Screen Kit
D6994	90° Vent Kit

ROLL FORMED LADDER COMPONENTS

PART #	DESCRIPTION
4FOOTRFBFT	48" Formed Ladder Section
LDR-4317	Ladder Section Splice Plate (Requires 2 per Section)
LDR-4320	Outside Standoff Brackets (Bag of 10)
LDR-4322	Stirator Short Standoff Brackets (Bag of 10)
LS-6849	Bin Eave Platform (24 x 30)
LS-6907	Top Safety Cage (No Platform)
LS-6774	24" Bell Safety Cage Package
LS-6773	48" Bell Safety Cage Package
LS-6772	4' Safety Cage Extension Package
LS-6925	Eave Safety Cage Package
LS-6860	Intermediate Safety Cage Step-over Package
LS-6692	Large Eave Platform (30 x 57)
8FOOTRFB	8' - 4" Ladder Side Rail (Used with LS-6925) - 2 per Section
LDR-5445	Ladder Security Door Package

Ladder Security Door Package

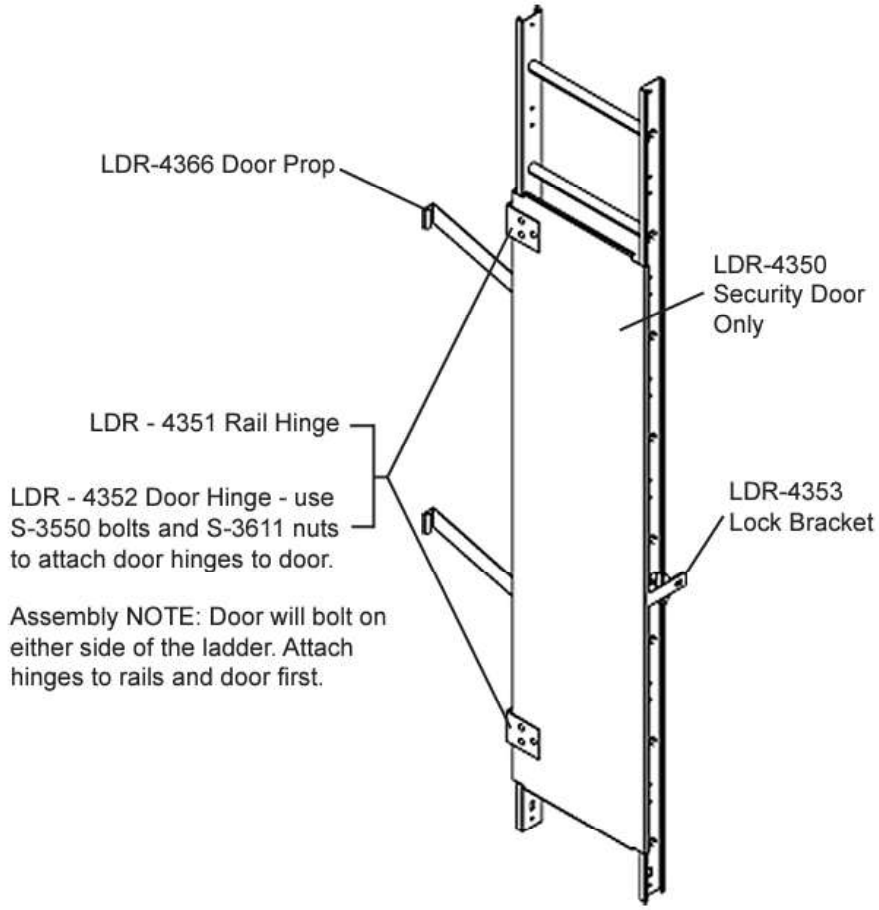

Ladder Fall Protection System

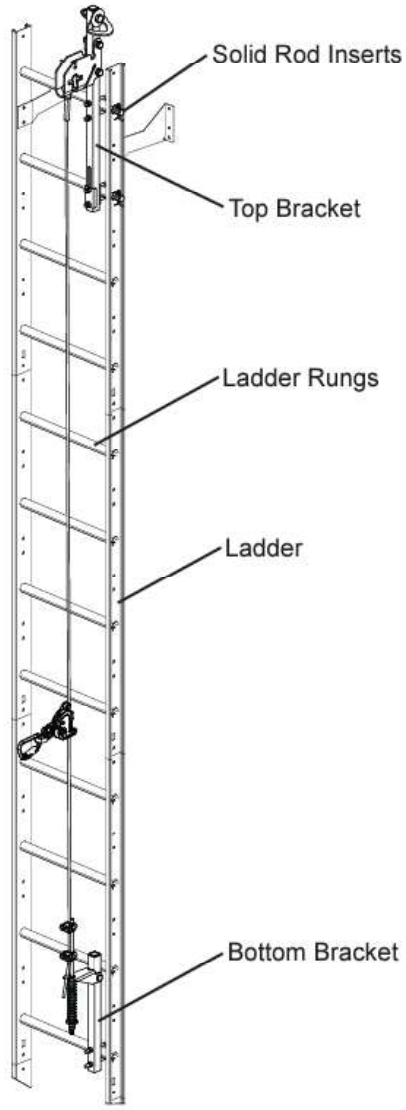

EAVE PLATFORMS

3-Panel Roof Platform Options:
21' - 66' Diameter Bins

WBS-1000
3-Panel Eave Platform, Single

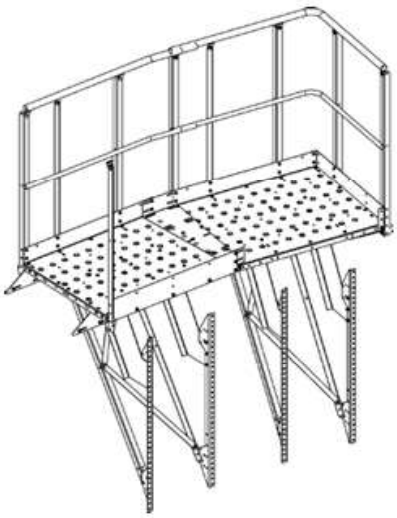

WBS-1003
3-Panel Eave Platform, Double

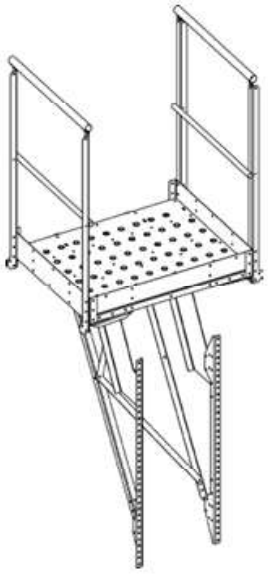

WBS-1022
3-Panel Eave Platform,
Twin Platform

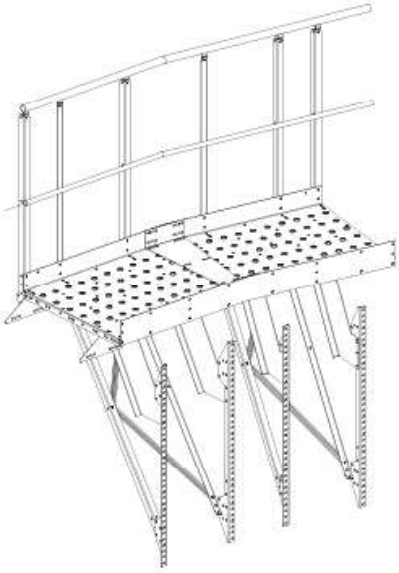

TDWBS-1003
3-Panel Intermediate Rest Platform,
Double

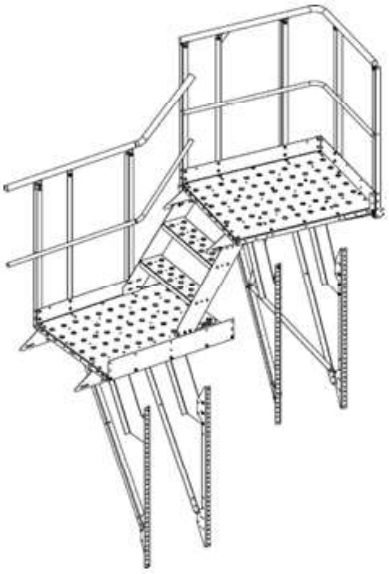

WBS-1029
3-Panel Eave Platform, Above/Below
Combination (4" Corrugated Bins Only)

PART #	*DESCRIPTION*
WBS-1000	3-Panel Eave Platform, Single
WBS-1003	3-Panel Eave Platform, Double
WBS-1022	3-Panel Eave Platform, Twin Platform
WBS-1029	3-Panel Eave Platform, Above/Below Combination (4" Corrugated Bins Only)
TDWBS-1003	3-Panel Intermediate Rest Platform, Double

EAVE PLATFORMS

4-Panel Rof Platform Options:
72' 135' Diameter Bins

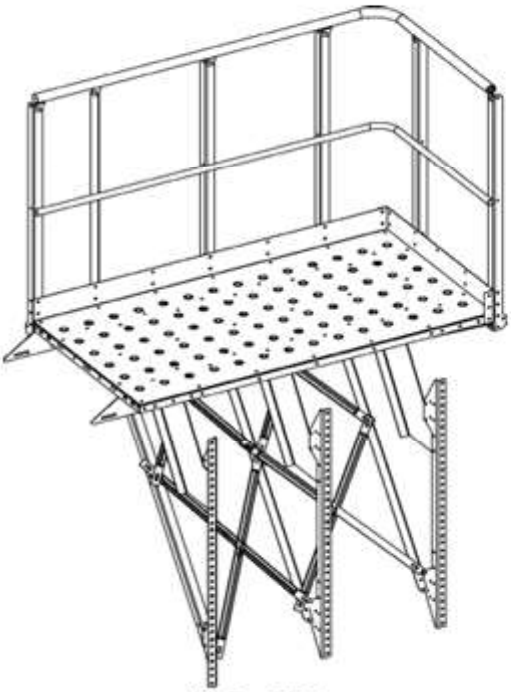

WBS-1020
4-Panel Eave Platform

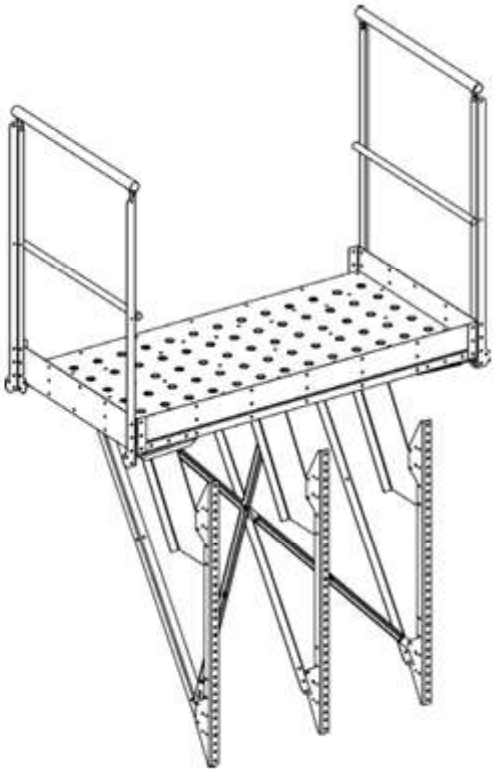

WBS-1039
4-Panel Twin Platform

PART #	*DESCRIPTION*
WBS-1020	Eave Platform, 4-Panel Roof
WBS-1039	Twin Platform, 4-Panel Roof

Roof Stairs

PART #	DESCRIPTION	LENGTH	3-STEP	4-STEP	8-STEP
RFS-1012	12' Roof Stairs	3' 2-1/2"	1	0	0
RFS-1015	15' Roof Stairs	4' 7-1/10"	0	1	0
RFS-1018	18' Roof Stairs	6' 10-3/4"	2	0	0
RFS-1021	21' Roof Stairs	8' 0-1/2"	1	1	0
RFS-1024	24' Roof Stairs	9' 2-3/8"	3	0	0
RFS-1027	27' Roof Stairs	11' 5-7/8"	2	1	0
RFS-1030	30' Roof Stairs	12' 7-3/4"	1	2	0
RFS-1033	33' Roof Stairs	13' 9-1/2"	0	3	0
RFS-1036	36' Roof Stairs	16' 1-1/8"	2	2	0
RFS-1042	42' Roof Stairs	19' 6-1/2"	3	0	1
RFS-1048	48' Roof Stairs	21' 10"	1	0	2
RFS-1054	54' Roof Stairs	24' 1-5/8"	3	1	1
RFS-1060	60' Roof Stairs	27' 7"	0	0	3
RFS-1066	66' Roof Stairs	28' 6-1/2"	3	0	2
RFS-1072	72' Roof Stairs	32' 2-1/8"	0	1	3
RFS-1075	75' Roof Stairs	34' 5-3/4"	2	0	3
RFS-1078	78' Roof Stairs	35' 7-1/2"	1	1	3
RFS-1000	3-Step Section, Roof Stairs	3' 5-3/8"	1	0	0
RFS-1001	4-Step Section, Roof Stairs	4' 7-1/8"	0	1	0
RFS-1002	8-Step Section, Roof Stairs	9' 2-3/8"	0	0	1

NOTE: The step quantities and section layouts above are as required for a peak walkaround. Roof stair handrails are included in the above packages.

* The 3-step section used in RFS-1012 is not the same as the 3-step section used in other assemblies. It is specific to RFS-1012 only.

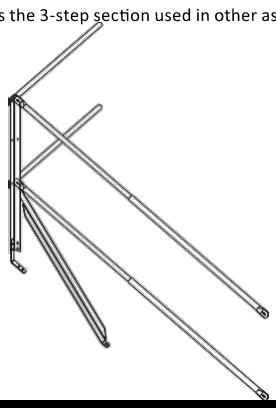

PART #	DESCRIPTION	PRICE
WBS-1046	Manway Guarding Package	$398.24

NOTE: If selected it must be used with an eave platform and either the roof ladder handrail kit or roof stairs

Peak Walkarounds

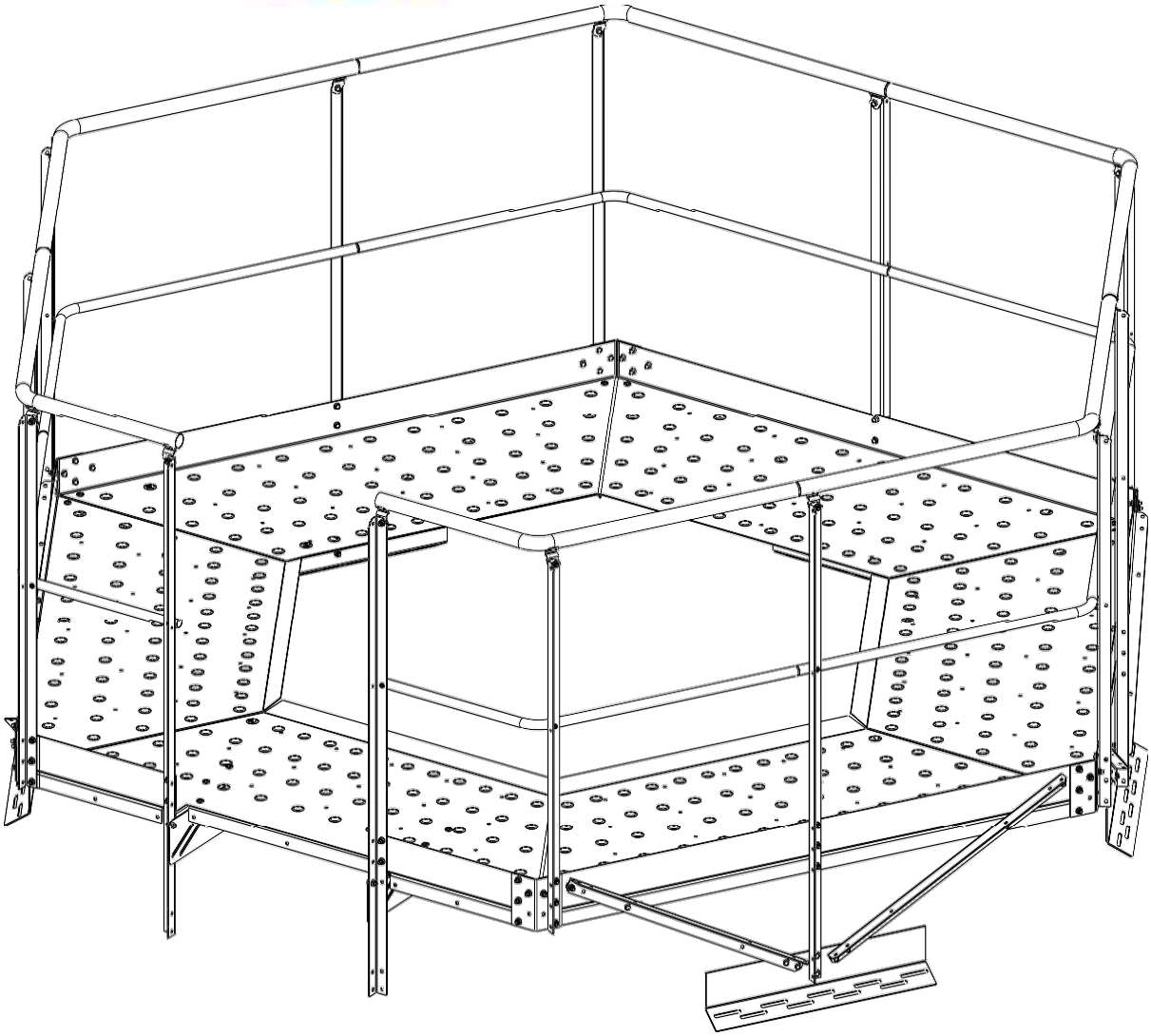

PART #	DESCRIPTION
WBS-1026	7' Peak Walkaround (12'-27' Bins)
WBS-1027	9' Peak Walkaround (30'-48' Bins)
WBS-1028	13' Peak Walkaround (54'-60' Bins)

NOTE: This package will include all necessary handrails for the walkaround

Roof Handrail Kits

PART #	DESCRIPTION
RFS-2012	12' Roof Handrail Kit
RFS-2015	15' Roof Handrail Kit
RFS-2018	18' Roof Handrail Kit
RFS-2021	21' Roof Handrail Kit
RFS-2024	24' Roof Handrail Kit
RFS-2027	27' Roof Handrail Kit
RFS-2030	30' Roof Handrail Kit
RFS-2033	33' Roof Handrail Kit
RFS-2036	36' Roof Handrail Kit
RFS-2042	42' Roof Handrail Kit
RFS-2048	48' Roof Handrail Kit
RFS-2054	54' Roof Handrail Kit
RFS-2060	60' Roof Handrail Kit
RFS-2066	66' Roof Handrail Kit
RFS-2072	72' Roof Handrail Kit
RFS-2075	75' Roof Handrail Kit
RFS-2078	78' Roof Handrail Kit
RFS-2090	90' Roof Handrail Kit
RFS-2105	105' Roof Handrail Kit
RFS-2135	135' Roof Handrail Kit

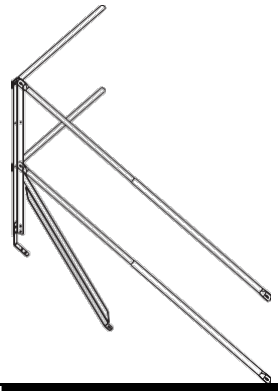

PART #	DESCRIPTION	PRICE
WBS-1046	Manway Guarding Package	$398.24

NOTE: If selected it must be used with an eave platform and either the roof ladder handrail kit or roof stairs

Peak Handrail Kits

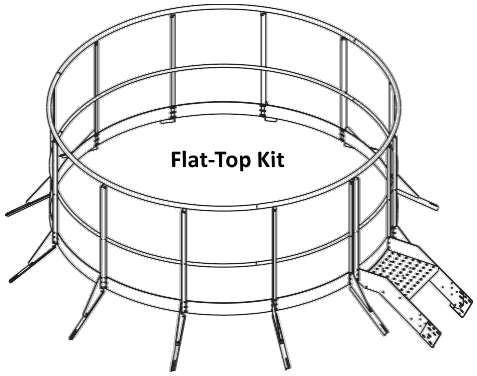

PART #	DESCRIPTION
WBS-1041-054	54' - 6' Peak Handrail Kit
WBS-1041-060	60' - 6' Peak Handrail Kit
WBS-1042-066	66' - 10' Peak Handrail Kit
WBS-1042-072	72' - 10' Peak Handrail Kit
WBS-1042-075	75' - 10' Peak Handrail Kit
WBS-1042-078	78' - 10' Peak Handrail Kit
WBS-1042-090	90' - 10' Peak Handrail Kit
WBS-1042-105	105' - 10' Peak Handrail Kit
WBS-1043-135	135' -14' Peak Handrail Kit

For "Flat-Top Handrail Kits"
a) Can only be used with 6', 10' or 14' Flat-Tops
b) Will work best with Roof Stair packages
c) Should not be ordered on a tank with no flat-top or a 33.5" flat-top

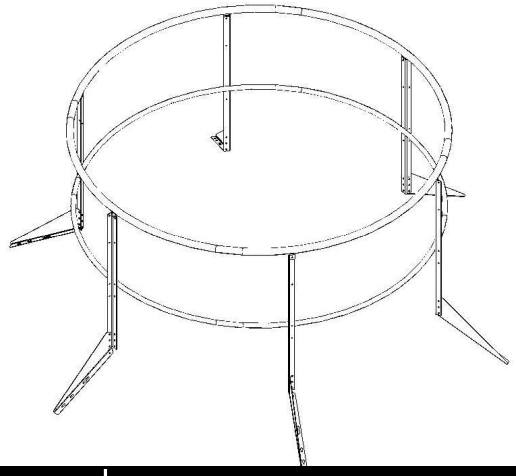

PART #	DESCRIPTION
WBS-1047	7'-1" Peak Handrail Kit
WBS-1048	11'-12" Peak Handrail Kit

For "Peak Handrail Kits"
a) Can be used on any bin without a 6', 10', or 14' Flat-Top
b) Will work with roof stairs or roof handrails
c) Either the 6' or 10' versions may be ordered for each available diameter dependent on customer's desired location

BINMASTER®

Rotary Level Indicator

BMRX
Standard Rotary

CERTIFIED ISO 9001:2008 garner CERTIFIED

- Rugged construction and simple, dependable design
- Triple thread screw-off cover
- Switch selectable high/low fail-safe
- De-energizing motor for extended operational life
- Four-bearing shaft assembly reduces wear and increases reliability
- Internal, bi-directional clutch
- Various voltages available
- DPDT relay output, 250 VAC, 10 Amp
- Dual conduit entrance
- Removable wiring terminals
- Interchangeable with other rotaries
- Powder-coated finish
- Adjustable sensitivity

Simple, Rugged, Reliable Point Level Detection

BinMaster rotaries are a proven, long-lasting solution for detecting low, mid, and high levels in bins, tanks, and silos. A wide selection of three-vane, two-vane, collapsible, insertable, and bayonet-style paddles are available to address materials from one pound per cubic foot to 150 pounds per cubic foot. BinMaster offers the widest selection of accessories to meet the challenges of all types of bulk solids applications. The standard BMRX and MAXIMA+ genuine fail-safe rotaries are designed and manufactured in BinMaster's ISO 9001:2008 certified facility in Lincoln, Nebraska, USA.

Advanced Design

BinMaster engineers continually build advanced features into the BMRX and MAXIMA+ rotaries to ensure reliable, long-lasting performance.

De-Energizing Motor: BinMaster's specially designed synchronous motor features "de-energized" operation which shuts the motor down when material is present rather than remaining in a "stalled" condition. This reduces wear and operating temperature, which extends motor life.

Built-In Slip Clutch: The motor has a built-in bi-directional slip-clutch that protects the gear assembly from damage due to over rotation.

Four-Bearing Drive Shaft: Unlike other rotary level indicators, BinMaster rotaries are built with a four-bearing drive shaft assembly. This unique design reduces motor drag during paddle rotation.

Screw-Off Cover: BinMaster's enclosure features a twist-off cover with no-bolt access to the internal components of the rotary, making the unit easy to open for wiring or service.

Principle of Operation

High Level Control During Filling

As a high level control, the paddle rotates continually when material is not present. When material reaches the paddle, the resistance causes the motor to rotate an actuator arm over to a limit switch that is wired to some type of alarm or process equipment.

Low Level Control When Emptying

As a low level control, the paddle is stopped and the motor is "de-energized" when material is present. When material drops below the paddle, an actuator arm springs back into place, causing the motor to "re-energize" and the paddle starts rotating. This will send an alert to an alarm or automatically start up a process system.

STANDARD HORIZONTAL AND VERTICAL MOUNTED ROTARY

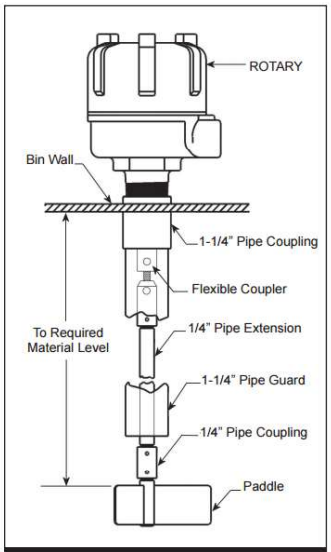

Standard Extended Vertical Mounted Rotary

Standard mounted rotary for straight vertical installations. Angled mounting plates are available for sloped roof installations. The pipe guards and extensions are available in both galvanized or stainless steel (see page 7 & 8)

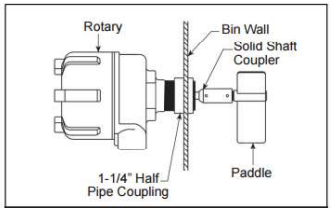

Standard Horizontal or Vertical Mounted Rotary

Standard mounted rotary for vertical, horizontal and angled installations

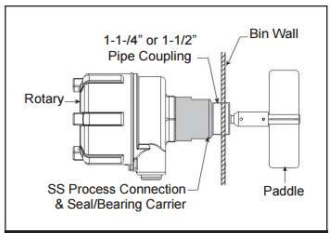

Standard Horizontal or Vertical Mounted Rotary with Optional SS Process Connection Bearing Carrier

The optional stainless steel process connection and seal/bearing carrier is used in corrosive applications. All parts in contact with the materials in the bin are stainless steel (see page 11)

NEEDED FOR BIN FULL INDICATORS	
Rotary Switch, BMRX 115V Level Indicator	730-0504
GRP-37 Threaded, Folding, Double-Blade, Insertable Paddle	416-0557
GRFC-1 SST Flex Coupler	416-0155

BMRX

The affordable BMRX is our standard rotary level control. It includes easy access to the electronics through a triple-threaded screw-off cover and removable wire terminals for easy wiring, DPDT relay output, plus an easy-access dual conduit entrance. New fail-safe protection eliminates process accidents due to power loss. This cost-effective paddle-style device includes state-of-the-art refinements that make it more secure and reliable, as well as easier to maintain.

CUSTOM SIDEWALL BINDICATOR MOUNTS	
Narrow Corr Bins (2.66")	MW-BSWM (NC)
Wide Corr Bins (4")	MW-BSWM (WC)

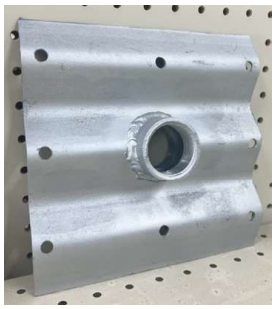

BINMASTER®

BINMASTER

Rotaries are a common point level indicator used for high-, mid- and low-level materi- al detection in bins, tanks, and silos. Rotaries are wired to a horn, alarm or light panel to send an alert when material reaches the desired level. BinMaster's standard and fail-safe rotaries can be fit with a wide assort- ment of paddles and mounting plates, plus a compact mini-rotary is offered for constrained spaces. Extended rotaries for top mounting applications for high level detection, extensions for side mount- ing through thick bin walls, and stainless steel process connections for corrosive material ensure BinMaster has the right rotary for challenging applications.

Description	Part #
BMRX POWER PACS	
BMRX - 115 VAC - Rotary level indicator power pac featuring a triple-thread, screw-off cover, dual conduit entries, DPDT relay contacts, selectable fail-safe protection, FDA recognized powder coat finish, hazardous location approval, and C/ US listed for Class I, Groups C & D and Class II, Groups E, F & G.	730-0504
BMRX - 230 VAC - Rotary level indicator power pac featuring a triple-thread, screw-off cover, dual conduit entries, DPDT relay contacts, selectable fail-safe protection, FDA recognized powder coat finish, hazardous location approval, and C/ US listed for Class I, Groups C & D and Class II, Groups E, F & G.	730-0503
BMRX - 24 VAC - Rotary level indicator 24 VAC with dual conduit entries, DPDT relay contacts, selectable fail-safe protection, and FDA recognized powder coat finish, hazardous location approval, and C/US listed for Class I, Groups C & D and Clas II, Groups E, F & G.	730-0505
BMRX - 24 VDC - Rotary level indicator 12 to 24 VDC with dual conduit entries, DPDT relay contacts, select- able fail-safe protection, and FDA recognized powder coat finish, hazardous location approval, and C/US listed for Class I, Groups C & D and Class II, Groups E, F & G.	730-0661
FITTINGS	
GRPC-1 - 1-1/4" stainless steel process connection fitting & o-ring for 1" coupled pipe guards	416-0507
GRPC-2 - 1-1/2" stainless steel process connection fitting & o-ring for 1" coupled pipe guards	416-0508
GRPC-3 - 1-1/4" Aluminum process connection fitting & o-ring for 1" coupled pipe guards	416-0505
GRPC-4 - 1-1/2" Aluminum process connection fitting & o-ring for 1" coupled pipe guards	416-0506
SSPC-1 - 1-1/4" NPT stainless steel process connection with bearing and seal	416-0547
SSPC-2 - 1-1/2" NPT stainless steel process connection with bearing and seal	416-0548
"SSPC-3 - 1-1/4" NPT stainless steel process connection with bearing and seal, includes teflon bearing and grease packed bearings to provide additional corrosion resistance"	416-0736
COUPLINGS	
GRSS-1 - Solid shaft, stainless steel side mount coupler	299-0004
GRFC-1 - Flexible stainless steel top mount coupler	416-0155
GRFS-1 - Molded neoprene, flexible shaft, stainless steel top mount coupler	416-0283
BSA - Bindicator stainless steel shaft adapter, to couple BinMaster rotary PowerPac to a Bindicator shaft coupler or Bindicator Paddle.	416-0294

BINMASTER®

Paddle Assemblies

GRP-1
Stainless steel for light materials, 3-vane paddle, turns in 7" diameter.

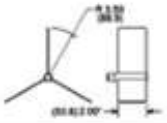

GRP-2
Stainless steel for medium materials, 3-vane paddle, turns in 5" diameter.

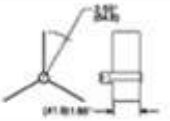

GRP-3
Stainless steel for heavy materials, single vane, turns in 5" diameter, insertable through a 1-1/4" or 1-1/2" NPT opening.

GRP-11
Economical nylon paddle for light materials, 3-vane paddle, turns in 7" diameter.

GRP-12
Economical nylon paddle for medium materials 3-vane paddle, turns in 5" diameter.

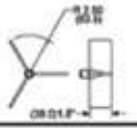

GRP-22
Stainless steel for heavy materials, 3-vane paddle, turns in 5" diameter.

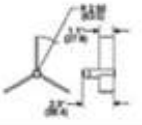

GRP-23
Stainless steel single bayonet style paddle, turns in 5" diameter. Insertable through a 1-1/4" or 1-1/2" NPT opening.

GRP-24
12" belt paddle for use in heavy material with large particulate size such as rock, coal or aggregate.

GRP-25
Stainless steel for very light materials, 3-vane, paddles are 5" tall and 1/16" thick to increase resistance in light materials.

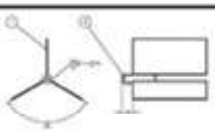

GRP-26
Direct connect version of GRP-1 for light materials, 3-vane, stainless steel, 7" diameter with blades that are 2" wide (side mounting only).

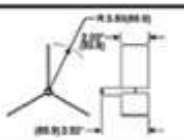

GRP-27
Direct connect version of GRP-23 paddle for medium materials. Insertable, single bayonet style, stainless steel, blade is 1/8" thick and 1" wide (side mounting only).

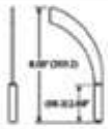

GRP-28
Stainless steel for extremely light materials, 3-vane, 7" diameter for added resistance, blades are 5" tall and 1/16" thick to increase resistance in light materials.

GRP-29
Direct connect version of GRP-25, 3-vane, stainless steel paddle for very light materials, paddles are 5" tall and 1/16" thick to increase resistance in light materials (side mounting only).

GRP-30
Direct connect version of GRP-2 for medium materials, 3-vane paddle, stainless steel, turns in 5" diameter, (side mounting only).

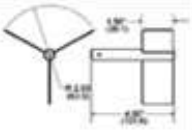

GRP-31
Stainless steel, single-bladed, 3-1/4" long for heavy materials, turns in 6-1/2" diameter, blade is 1/8" thick and 1.63" wide.

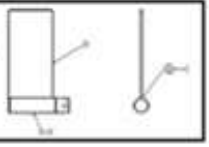

GRP-34
Stainless steel, single-bladed, direct connect, insertable paddle, folds to insert through a 1-1/4' or 1-1/2" NPT opening, turns in 7-1/2" diameter. Paddle blades are 1-1/2" wide.

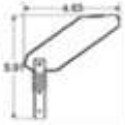

GRP-35
Stainless steel, double-bladed, direct connect, insertable paddle, folds to insert through a 1-1/4" or 1-1/2" NPT opening, turns in 7-1/2" diameter, paddles blades are 1-1/2" wide.

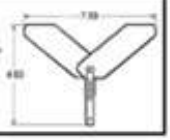

GRP-36
Stainless steel, single-bladed, threaded, insertable paddle, folds to insert through a 1-1/4" or 1-1/2" NPT opening, turns in 7-1/2" diameter, paddles blades are 1-1/2" wide.

GRP-37
Stainless steel, double-bladed, threaded, insertable paddle, folds to insert through a 1-1/4" or 1-1/2" NPT opening, turns in 7-1/2" diameter, paddles blades are 1-1/2" wide.

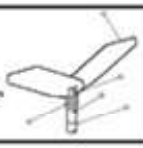

Description	Part #
MOUNTING PLATES	
GRMP-1 - 0° Mild carbon steel half coupling 1.25” with black neoprene gasket	730-0020
GRMP-2 - GRMP-2 - 0° Mild carbon steel full coupling 1.25”, powder coated with black neoprene gasket	730-0022
GRMP-3 - 0° stainless steel half coupling 1.25” mounting plate with black neoprene gasket	730-0021
GRMP-4 - 0° stainless steel full coupling 1.25” with black neoprene gasket	730-0023
GRMP-9 - 10° Mild carbon steel full coupling 1.25”, powder coated with black neoprene gasket	730-0489
GRMP-13 - 30° Mild carbon steel full coupling 1.25”, powder coated with black neoprene gasket	730-0508
GRMP-14 - 0° Mild carbon steel half coupling 1.25” with white silicone gasket	730-0567
GRMP-15 - 0° stainless steel full coupling 1.25” with white silicone gasket	730-0568
GRMP-16 - 20° Mild carbon steel full coupling 1.25”, powder coated with black neoprene gasket	730-0663
PADDLES	
GRP-1 - Triple-bladed, stainless steel paddle for light weight materials, paddle turns in a 7” diameter, blades are 2” wide	416-0161
GRP-2 - Triple-bladed, stainless steel paddle for average weight materials, paddle turns in a 5” diameter, blades are 1-1/2” wide	416-0152
GRP-3 - Single-blade, stainless steel paddle for average to heavy weight materials, paddle is 2-1/2” long and turns in a 5” diameter, insertable paddle blade is 1/8” thick and 1” wide	416-0153
"GRP-11 - High strength nylon paddle for lightweight materials, triple-bladed paddle turns in a 7” diameter, blades are 2” wide"	299-0009
GRP-12 - High strength nylon paddle for average weight materials, triple-bladed paddle turns in a 5” diameter, blades are 1.5” wide	299-0010
GRP-22 - Triple-bladed, stainless steel paddle for average to heavy weight materials, turns in a 5” diameter, paddle blades are 1/8” thick and 1” wide	416-0160
"GRP-23 - Single bayonet blade, stainless steel paddle for high level control in light and medium materials and low level control in light materials, insertable paddle blade is 1/8” thick and 1” wide"	416-0154
GRP-24 - 12” Belt paddle for high level control in heavy materials with large particle size	416-0259
GRP-25 - Triple-bladed, stainless steel paddle for very light materials, paddle turns in a 5” diameter, blades are 5” tall and 1/16” thick	416-0261
"GRP-26 - Triple-bladed, stainless steel paddle for light weight materials, paddle turns in a 7” diameter, blades are 2” wide, direct connect paddle that eliminates the need for GRSS-1 coupler"	416-0265
GRP-27 - Single bayonet blade, stainless steel paddle for high level control in light and medium materials and low level control in light materials, insertable paddle blade is 1/8” thick and 1” wide, direct connect paddle that eliminates the need for GRSS-1 coupler	416-0266
GRP-28 - Triple-bladed, stainless steel paddle for extremely light materials, paddle turns in a 7” diameter, blades are 5” tall and 1/16” thick	416-0336
GRP-29 - Triple-bladed, stainless steel paddle for very light materials, paddle turns in a 5” diameter, blades are 5” tall and 1/16” thick, direct connect paddle that eliminates the need for GRSS-1 coupler	416-0430
GRP-30 - Triple-bladed, stainless steel paddle for average weight materials, paddle turns in a 5” diameter, blades are 1-1/2” wide, direct connect paddle that eliminates the need for GRSS-1 coupler	416-0100
GRP-31 - Single-bladed, stainless steel paddle for medium to heavy materials, paddle turns in a 6.5” diameter, blade is 3.25” long, 1.63” wide and 1/8” thick	416-0487
GRP-34 - Folding, single-bladed, insertable paddle for medium materials will fold to insert through a 1-1/4” or 1-1/2” process connection, turns in a 7.5” diameter, blades are 1-1/2” wide, direct connect paddle that eliminates the need for GRSS-1 coupler	416-0513
GRP-35 - Folding, double-bladed, insertable paddle for medium materials will fold to insert through a 1-1/4” or 1-1/2” process connection, turns in a 7.5” diameter, blades are 1-1/2” wide, direct connect paddle that eliminates the need for GRSS-1 coupler	416-0514
GRP-36 - Threaded, folding, single-bladed, insertable paddle for medium materials will fold to insert through a 1-1/4” or 1-1/2” process connection, turns in a 7.5” diameter, blades are 1-1/2” wide, for use with standard threaded coupler	416-0556
GRP-37 - Threaded, folding, double-bladed, insertable paddle for medium materials will fold to insert through a 1-1/4” or 1-1/2” process connection, turns in a 7.5” diameter, blades are 1-1/2” wide, for use with standard threaded coupler	416-0557

Mounting Plates

Mounting plates allow the rotary units to be mounted from the outside of a vessel on a curved or flat surface. A half coupling mounting plate is used in side mount installations. A full coupling mounting plate is for use in top mount installations where a shaft extension and shaft guards are required. Both mounting plates are available in powder coated carbon steel and stainless steel for use in corrosive environments.

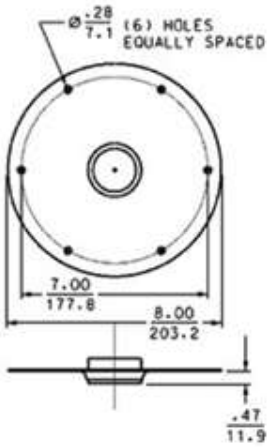

Half Coupling Mounting Plate

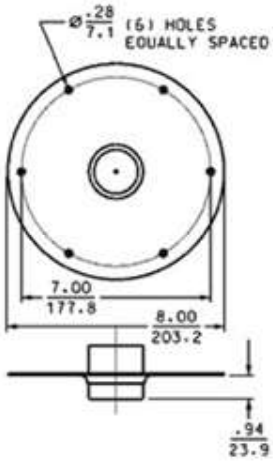

Full Coupling Mounting Plate

Solid Shaft Coupler

A short solid shaft coupler should be used in side mount installations.

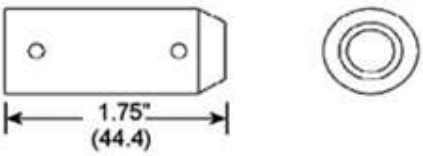

Flexible Shaft Coupler

The flexible coupler should be used in top mount installations to absorb side loads and protect the internal workings of the unit.

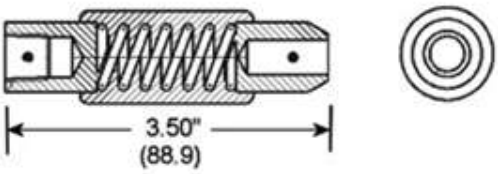

Leading Cause Of Rotary Indicator Failure Is Moisture Entering The Unit Through The Electrical Conduit Fitting
Make Sure This Area Is Completely Sealed During Installation

Description	Part #
GALVANIZED SHAFT EXTENSIONS	
6” x 1/4”Ø Galvanized shaft extension, includes paddle coupling	299-0407
12” x 1/4”Ø Galvanized shaft extension, includes paddle coupling	299-0408
15” x 1/4”Ø Galvanized shaft extension, includes paddle coupling	299-0907
18” x 1/4”Ø Galvanized shaft extension, includes paddle coupling	299-0409
24” x 1/4”Ø Galvanized shaft extension, includes paddle coupling	299-0410
30” x 1/4”Ø Galvanized shaft extension, includes paddle coupling	299-0682
36” x 1/4”Ø Galvanized shaft extension, includes paddle coupling	299-0411
48” x 1/4”Ø Galvanized shaft extension, includes paddle coupling	299-0412
60” x 1/4”Ø Galvanized shaft extension, includes paddle coupling	299-0609
63” x 1/4”Ø Galvanized shaft extension, includes paddle coupling	299-0610
72” x 1/4”Ø Galvanized shaft extension, includes paddle coupling	299-0611
84” x 1/4”Ø Galvanized shaft extension, includes paddle coupling	299-0612
XX x 1/4”Ø Custom Galvanized shaft extension, includes paddle coupling. $25 minimum on custom shaft lengths.	999-1000-XX
STAINLESS STEEL SHAFT EXTENSIONS	
6” x 1/4”Ø stainless steel shaft extension, includes paddle coupling	299-0413
12” x 1/4”Ø stainless steel shaft extension, includes paddle coupling	299-0414
15” x 1/4”Ø stainless steel shaft extension, includes paddle coupling	299-0908
18” x 1/4”Ø stainless steel shaft extension, includes paddle coupling	299-0415
24” x 1/4”Ø stainless steel shaft extension, includes paddle coupling	299-0416
30” x 1/4”Ø stainless steel shaft extension, includes paddle coupling	299-0735
36” x 1/4”Ø stainless steel shaft extension, includes paddle coupling	299-0417
48” x 1/4”Ø stainless steel shaft extension, includes paddle coupling	299-0418
60” x 1/4”Ø stainless steel shaft extension, includes paddle coupling	299-0634
72” x 1/4”Ø stainless steel shaft extension, includes paddle coupling	299-0636
84” x 1/4”Ø stainless steel shaft extension, includes paddle coupling	299-0637
XX x 1/4”Ø Custom stainless steel shaft extension, includes paddle coupling. $25 minimum on custom shaft lengths.	999-1001-XX

Description	Part #
1-1/4" STAINLESS STEEL SHAFT GUARDS	
6” x 1-1/4” Diameter stainless steel shaft guard	299-0912
12” x 1-1/4” Diameter stainless steel shaft guard	299-0913
15” x 1-1/4” Diameter stainless steel shaft guard	299-0914
18” x 1-1/4” Diameter stainless steel shaft guard	299-0737
24” x 1-1/4” Diameter stainless steel shaft guard	299-0422
30” x 1-1/4” Diameter stainless steel shaft guard	299-0738
36” x 1-1/4” Diameter stainless steel shaft guard	299-0423
48” x 1-1/4” Diameter stainless steel shaft guard	299-0424
60” x 1-1/4” Diameter stainless steel shaft guard	299-0638
63” x 1-1/4” Diameter stainless steel shaft guard	299-0639
72” x 1-1/4” Diameter stainless steel shaft guard	299-0640
84” x 1-1/4” Diameter stainless steel shaft guard	299-0641
XX x 1-1/4” Custom diameter stainless steel shaft guard. $25 minimum on custom guard lengths.	999-1003-XX
1-1/4" GALVANIZED SHAFT GUARDS	
6” x 1-1/4” Diameter Galvanized shaft guard	299-0909
12” x 1-1/4” Diameter Galvanized shaft guard	299-0910
15” x 1-1/4” Diameter Galvanized shaft guard	299-0911
18” x 1-1/4” Diameter Galvanized shaft guard	299-0681
24” x 1-1/4” Diameter Galvanized shaft guard	299-0419
30” x 1-1/4” Diameter Galvanized shaft guard	299-0736
36” x 1-1/4” Diameter Galvanized shaft guard	299-0420
48” x 1-1/4” Diameter Galvanized shaft guard	299-0421
60” x 1-1/4” Diameter Galvanized shaft guard	299-0613
63” x 1-1/4” Diameter Galvanized shaft guard	299-0614
72” x 1-1/4” Diameter Galvanized shaft guard	299-0615
84” x 1-1/4” Diameter Galvanized shaft guard	299-0616
XX x 1-1/4” Custom diameter Galvanized shaft guard. $25 minimum on custom guard lengths.	999-1002-XX

Description	Part #
ACCESSORIES	
"Rotary fitting to allow 1" guard pipe extensions to be adjusted for variable insertion lengths. The fitting threads into BinMaster 1 1/4" mounting plate and has set screws to allow variable height adjustments."	416-0641
1-1/4" Galvanized NPT female coupler to attach guard pipes together	201-9010
1-1/4" stainless steel NPT female coupler to attach guard pipes together	201-9033
1" Aluminum NPT female coupler to attach guard pipes together	201-9034
1" stainless steel NPT female coupler to attach guard pipes together	201-9035
1/4" Galvanized NPT female coupler to attach paddle to shaft extensions or shaft extensions together	201-9028
1/4" SS NPT female coupler to attach paddle to shaft extensions or shaft extensions together	201-9029
1/4" Aluminum NPT female coupler to attach paddle to shaft extensions or shaft extensions together	201-9036
REPLACEMENT PARTS	
BMRX actuator arm	299-0670
BMRX die cast aluminum cap (short) units after April 2016	220-0419
BMRX die cast aluminum cap AC only units prior to April 2016	220-0366
BMRX die cast aluminum cap DC only units prior to April 2016	220-0370
BMRX housing gasket units prior to April 2016	280-0072
BMRX motor 115 VAC	350-0056
BMRX motor 230 VAC	350-0059
BMRX motor shaft	285-0132
BMRX PCB main 12-14 VDC (Units after May 2014)	530-0791
BMRX PCB main with limit and motor switch 115 VAC	530-0179
BMRX PCB with limit and motor switch 230 VAC	530-0182
BMRX PCB with limit and motor switch 24 VAC	530-0183
BMRX/MAXIMA+ 6 VDC (Units after May 2014)	350-0060
BMRX/MAXIMA+ conduit vent 3/4" NPT	336-0017
BMRX/MAXIMA+ housing gasket units after April 2016	203-0080
BMRX/MAXIMA+ locking tab	299-0679
BMRX/MAXIMA+ motor 24/30 VAC	350-0058
BMRX/MAXIMA+ motor mounting plate	416-0477
BMRX/MAXIMA+ motor spring	292-0036
BMRX/MAXIMA+ o-ring, .139 CORD X 1.88 I.D.	203-0077
BMRX/MAXIMA+ roll pin	150-5004
BMRX/MAXIMA+ Rotary bearing	200-1004
BMRX/MAXIMA+ Rotary conduit plug	175-0188
BMRX/MAXIMA+ Rotary divider all AC units	338-0111
BMRX/MAXIMA+ Rotary divider all DC units	338-0114
BMRX/MAXIMA+ Rotary mounting plate gasket	280-0003
BMRX/MAXIMA+ Rotary retaining ring	165-0002
BMRX/MAXIMA+ Rotary shaft seal	280-0068
BMRX/MAXIMA+ screw, plastics #6-19	175-0182

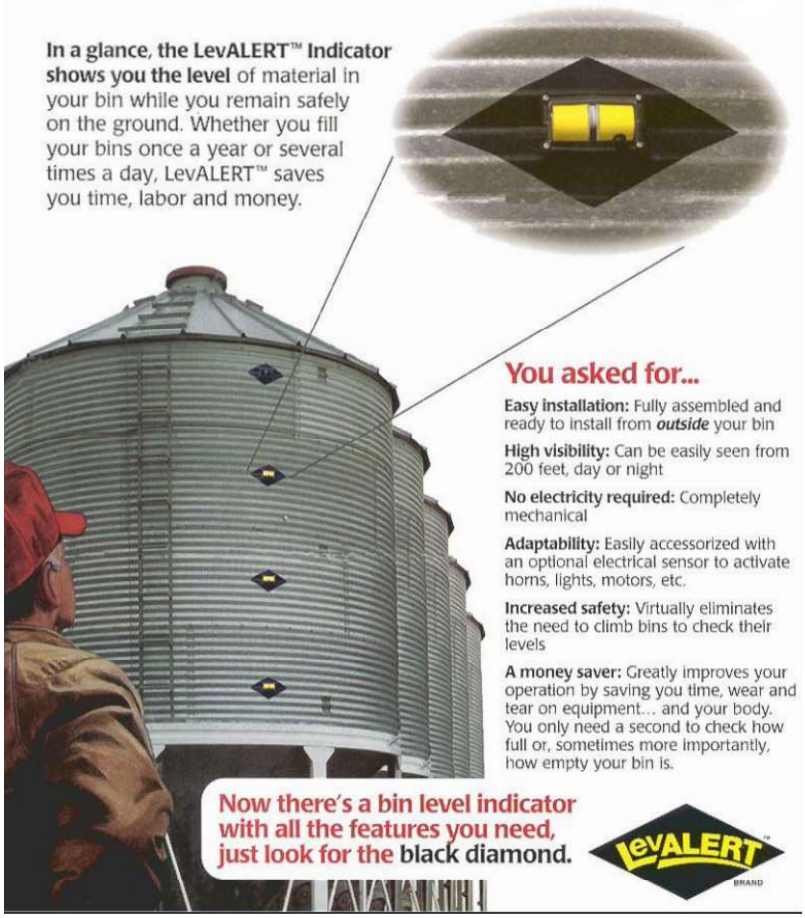

ITEM #	DESCRIPTION
EZ760	Model 760 LevAlert Indicator
EZ760SRK	Model 760 Magentic Sensor/Relay Kit
EZ760S	Model 760 Magnetic Sensor Only

GRAIN GAUGE®

STANDARD FEATURES & BENEFITS:

- Easy Installation
- Clear visibility: glows-in-the-dark
- Two times larger than other brands
- No electricity required
- Maintenance Free
- Cost Effective

SIMPLE INSTALLTION:

The Grain Gauge® is installed from the outside of the bin. No bin entry required. Simply drill a 1.25" hole and insert two screws. It's that simple.

REPLACING EXISTING INDICATORS:

Have another brand of indicator on your bins? Did it stop working? Want to upgrade yours to a Grain Gauge®? No problem. Simply swap out our old level indicator with a Grain Gauge®

HOW IT WORKS:

Once the material reacheds the desired level of the Grain Gauge® on your bin, the roller portion of the gauge will turn from black to a bright green. The bright green will also glow in the dark at night time. As the material is emptied from your bin and recedes below the gauge, the roller will automatically change to black

PART #: GrainGauge

In Bin Grain Sampler

Sample Tube Attaches To The Bin Wall To Be Able To Pull Samples Out Of The Bin Without Entering It.
Multiple Units Can Be Installed In The Same Bin To Draw Samples From All Around The Bin

***** WILL NOT WORK WITH STIRRING BINS*****

*** Comes With Yellow Plug To Seal When Not In Use**

*** Bracket To Assist With Supporting To The Bin Wall**

*** Optional Crank & Auger, If Needed**

*** Mounting Hardware Included For Installation On Emtpy Bin and Self-Drilling Screws For Full Bins**

DESCRIPTION	PART #
Sampler Tube w/ Support Brackets	AD-BCA-ST-2
Sampler Auger & Crank	AD-BCA-CA-2

---

5. Allows for safe bin climbing.
4. OH&S, CSA , OSHA & ANSI compliant.
3. OH&S regulations state that a fall protection system must be in place when working at heights above 10 feet.
2. An injury or death due to lack of required fall protection can bring financial ruin to a farm.
1. **The NUMBER ONE reason...** to protect your family, and employees. ***Be safe, not sorry.***

WHICH WOULD YOU RATHER BE?

WITH BIN SAFE

WITHOUT BIN SAFE

Bin Safe System

"Safety is your lifeline."

PROTECT YOUR FAMILY AND EMPLOYEES FROM ONE OF THE MOST COMMON ACCIDENT LOCATIONS ON A FARM

DESCRIPTION	PART #
Fall Protection Kit w/ 40' Wire Rope	Fall Protect 40'
Fall Protection Kit w/ 60' Wire Rope	Fall Protect 60'
Fall Protection Kit w/ 80' Wire Rope	Fall Protect 80'
Fall Protection Kit w/ 110' Wire Rope	Fall Protect 110'
User Kit (one user kit will service all bins) Includes: - 3' Lanyard - Fall Protection Harness - Rope Grab	User Kit

Why wouldn't you have fall protection installed on all of your bins?
One fall makes the cost look insignificant

FARM SAFETY FEATURE FIRST PLACE

1ST PLACE WINNER
1st place winner of the 2018 Agri-Trade Equipment Expo's AG Innovations Award!

Ag in Motion Innovations Program
WINNER
Agricultural Equipment

5 - SPOUTING & ACCESSORIES

Spouting	2-3
Spout Accessories	4-7
Stainless Spout Accessories	8
Plate Magnet Seperators	9
Liners & Patches	10-11

Galvanized Spouting

*	4"	14ga.	Spout-04/14-Rd/G-Ft
	4"	12ga.	Spout-04/12-Rd/G-Ft
*	5"	14ga.	Spout-05/14-Rd/G-Ft
	5"	12ga.	Spout-05/12-Rd/G-Ft
	6"	14ga	Spout-06/14-Rd/G-Ft
*	6"	12ga.	Spout-06/12-Rd/G-Ft
*	6"	10ga.	Spout-06/10-Rd/G-Ft
*	8"	14ga.	Spout-08/14-Rd/G-Ft
*	8"	12ga.	Spout-08/12-Rd/G-Ft
	8"	11ga.	Spout-08/11-Rd/G-Ft
*	8"	10ga.	Spout-08/10-Rd/G-Ft
*	8"	7ga.	Spout-08/7-Rd/G-Ft
	8"	1/4"	Spout-08/3-Rd/G-Ft
	10"	12ga.	Spout-10/12-Rd/G-Ft
	10"	11ga.	Spout-10/11-Rd/G-Ft
*	10"	10ga.	Spout-10/10-Rd/G-Ft
*	10"	7ga.	Spout-10/7-Rd/G-Ft
	10"	1/4"	Spout-10/3-Rd/G-Ft
	12"	12ga.	Spout-12/12-Rd/G-Ft
*	12"	10ga.	Spout-12/10-Rd/G-Ft
*	12"	7ga.	Spout-12/7-Rd/G-Ft
	12"	1/4"	Spout-12/3-Rd/G-Ft
	14"	10ga.	Spout-14/10-Rd/G-Ft
*	14"	7ga.	Spout-14/7-Rd/G-Ft
*	14"	1/4"	Spout-14/3-Rd/G-Ft
	16"	10ga.	Spout-16/10-Rd/G-Ft
	16"	7ga.	Spout-16/7-Rd/G-Ft
*	16"	1/4"	Spout-16/3-Rd/G-Ft
	18"	1/4"	Spout-18/3-Rd/G-Ft
	20"	1/4"	Spout-20/3-Rd/G-Ft
	24"	1/4"	Spout-24/3-Rd/G-Ft

* = In Stock
All Other Sizes Can Be Ordered

Carbon Steel Spouting

	4"	14ga.	Spout-04/14-Rd/CS-Ft
	4"	12ga.	Spout-04/12-Rd/CS-Ft
	5"	12ga.	Spout-05/12-Rd/CS-Ft
	5"	10ga.	Spout-05/10-Rd/CS-Ft
	6"	14ga	Spout-06/14-Rd/CS-Ft
	6"	12ga.	Spout-06/12-Rd/CS-Ft
	6"	11ga.	Spout-06/11-Rd/CS-Ft
	6"	10ga.	Spout-06/10-Rd/CS-Ft
	8"	14ga.	Spout-08/14-Rd/CS-Ft
	8"	12ga.	Spout-08/12-Rd/CS-Ft
	8"	11ga.	Spout-08/11-Rd/CS-Ft
	8"	10ga.	Spout-08/10-Rd/CS-Ft
	8"	7ga.	Spout-08/7-Rd/CS-Ft
	8"	1/4"	Spout-08/3-Rd/CS-Ft
	10"	12ga.	Spout-10/12-Rd/CS-Ft
	10"	11ga.	Spout-10/11-Rd/CS-Ft
	10"	10ga.	Spout-10/10-Rd/CS-Ft
	10"	7ga.	Spout-10/7-Rd/CS-Ft
	10"	1/4"	Spout-10/3-Rd/CS-Ft
	12"	12ga.	Spout-12/12-Rd/CS-Ft
	12"	10ga.	Spout-12/10-Rd/CS-Ft
	12"	7ga.	Spout-12/7-Rd/CS-Ft
	12"	1/4"	Spout-12/3-Rd/CS-Ft
	14"	12ga.	Spout-14/12-Rd/CS-Ft
	14"	10ga.	Spout-14/10-Rd/CS-Ft
*	14"	7ga.	Spout-14/7-Rd/CS-Ft
	14"	1/4"	Spout-14/3-Rd/CS-Ft
	16"	12ga.	Spout-16/12-Rd/CS-Ft
	16"	10ga.	Spout-16/10-Rd/CS-Ft
	16"	7ga.	Spout-16/7-Rd/CS-Ft
	16"	1/4"	Spout-16/3-Rd/CS-Ft
	18"	1/4"	Spout-18/3-Rd/CS-Ft
	20"	1/4"	Spout-20/3-Rd/CS-Ft
	24"	1/4"	Spout-24/3-Rd/CS-Ft

Stainless Steel Spouting

4"	14ga.	Spout-04/14-Rd/SST-Ft
4"	12ga.	Spout-04/12-Rd/SST-Ft
4"	10ga.	Spout-04/10-Rd/SST-Ft
6"	14ga	Spout-06/14-Rd/SST-Ft
6"	12ga.	Spout-06/12-Rd/SST-Ft
6"	10ga.	Spout-06/10-Rd/SST-Ft
8"	14ga.	Spout-08/14-Rd/SST-Ft
8"	12ga.	Spout-08/12-Rd/SST-Ft
8"	10ga.	Spout-08/10-Rd/SST-Ft
10"	14ga.	Spout-10/14-Rd/SST-Ft
10"	12ga.	Spout-10/12-Rd/SST-Ft
10"	10ga.	Spout-10/10-Rd/SST-Ft
12"	14ga.	Spout-12/14-Rd/SST-Ft
12"	12ga.	Spout-12/12-Rd/SST-Ft
12"	10ga.	Spout-12/10-Rd/SST-Ft
14"	12ga.	Spout-14/12-Rd/SST-Ft
14"	10ga.	Spout-14/10-Rd/SST-Ft
16"	12ga.	Spout-16/12-Rd/SST-Ft
16"	10ga.	Spout-16/10-Rd/SST-Ft

Pipe Size Spouting Galvanized

	6-5/8"	10ga.
	6-5/8"	7ga.
	8-5/8"	10ga.
	8-5/8"	7ga.
*	10-3/4"	10ga.
	10-3/4"	7ga.
	12-3/4"	10ga.
	12-3/4"	7ga.

Carbon Steel

6-5/8"	10ga.
6-5/8"	7ga.
8-5/8"	10ga.
8-5/8"	7ga.
10-3/4"	10ga.
10-3/4"	7ga.
12-3/4"	10ga.

SQUARE SPOUTING - WELDED SEAM - GALVANIZED
10' Sections

		6"	8"	10"	12"	14"	16"
12ga.	Unflanged	Spout-06/12-Sq/Un/W	Spout-08/12-Sq/Un/W	Spout-10/12-Sq/Un/W	Spout-12/12-Sq/Un/W	Spout-14/12-Sq/Un/W	Spout-16/12-Sq/Un/W
	Flanged	Spout-06/12-Sq/Flg/W	Spout-08/12-Sq/Flg/W	Spout-10/12-Sq/Flg/W	Spout-12/12-Sq/Flg/W	Spout-14/12-Sq/Flg/W	Spout-16/12-Sq/Flg/W
10ga.	Unflanged	Spout-06/10-Sq/Un/W	Spout-08/10-Sq/Un/W	Spout-10/10-Sq/Un/W	Spout-12/10-Sq/Un/W	Spout-14/10-Sq/Un/W	Spout-16/10-Sq/Un/W
	Flanged	Spout-06/10-Sq/Flg/W	Spout-08/10-Sq/Flg/W	Spout-10/10-Sq/Flg/W	Spout-12/10-Sq/Flg/W	Spout-14/10-Sq/Flg/W	Spout-16/10-Sq/Flg/W
7ga.	Unflanged	Spout-06/7-Sq/Un/W	Spout-08/7-Sq/Un/W	Spout-10/7-Sq/Un/W	Spout-12/7-Sq/Un/W	Spout-14/7-Sq/Un/W	Spout-16/7-Sq/Un/W
	Flanged	Spout-06/7-Sq/Flg/W	Spout-08/7-Sq/Flg/W	Spout-10/7-Sq/Flg/W	Spout-12/7-Sq/Flg/W	Spout-14/7-Sq/Flg/W	Spout-16/7-Sq/Flg/W
1/4"	Unflanged	Spout-06/3-Sq/Un/W	Spout-08/3-Sq/Un/W	Spout-10/3-Sq/Un/W	Spout-12/3-Sq/Un/W	Spout-14/3-Sq/Un/W	Spout-16/3-Sq/Un/W
	Flanged	Spout-06/3-Sq/Flg/W	Spout-08/3-Sq/Flg/W	Spout-10/3-Sq/Flg/W	Spout-12/3-Sq/Flg/W	Spout-14/3-Sq/Flg/W	Spout-16/3-Sq/Flg/W

Custom Sizes
Available
Call For Pricing

SQUARE SPOUTING - REMOVABLE LID - GALVANIZED
10' Sections

10ga.	6"	8"	10"	12"	14"
Unlined	Spout-06/10-Sq/Lid	Spout-08/10-Sq/Lid	Spout-10/10-Sq/Lid	Spout-12/10-Sq/Lid	Spout-14/10-Sq/Lid
Lined - AR	Spout-06/10-Sq/Lid/AR	Spout-08/10-Sq/Lid/AR	Spout-10/10-Sq/Lid/AR	Spout-12/10-Sq/Lid/AR	Spout-14/10-Sq/Lid/AR
Lined - 1/4" Blue Urethane	Spout-06/10-Sq/Lid/Blue	Spout-08/10-Sq/Lid/Blue	Spout-10/10-Sq/Lid/Blue	Spout-12/10-Sq/Lid/Blue	Spout-14/10-Sq/Lid/Blue
Lined - 1/4" Orange High Energy	Spout-06/10-Sq/Lid/Orange	Spout-08/10-Sq/Lid/Orange	Spout-10/10-Sq/Lid/Orange	Spout-12/10-Sq/Lid/Orange	Spout-14/10-Sq/Lid/Orange
Lined - 1/4" Kryptane Red	Spout-06/10-Sq/Lid/Red	Spout-08/10-Sq/Lid/Red	Spout-10/10-Sq/Lid/Red	Spout-12/10-Sq/Lid/Red	Spout-14/10-Sq/Lid/Red
Lined - Ceramic Tile	Spout-06/10-Sq/Lid/Tile	Spout-08/10-Sq/Lid/Tile	Spout-10/10-Sq/Lid/Tile	Spout-12/10-Sq/Lid/Tile	Spout-14/10-Sq/Lid/Tile

CAPACITIES (approx.)					
6"	8"	10"	12"	14"	16"
2,520	4,480	7,000	10,080	13,720	17,920

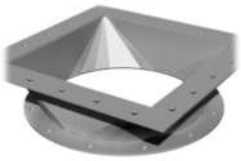

FLAT ROUND-FLANGES
Flange-Rd/Flt

SIZE	PART #
4"	Flange-Rd/Flt-04
6"	Flange-Rd/Flt-06
8"	Flange-Rd/Flt-08
10"	Flange-Rd/Flt-10
12"	Flange-Rd/Flt-12
14"	Flange-Rd/Flt-14
16"	Flange-Rd/Flt-16
18"	Flange-Rd/Flt-18
20"	Flange-Rd/Flt-20
22"	Flange-Rd/Flt-22
24"	Flange-Rd/Flt-24

ANGLE RING FLANGES
Flange-Rd/AR

SIZE	PART #
4"	Flange-Rd/Ar-04
5"	Flange-Rd/Ar-05
6"	Flange-Rd/Ar-06
8"	Flange-Rd/Ar-08
10"	Flange-Rd/Ar-10
12"	Flange-Rd/Ar-12
14"	Flange-Rd/Ar-14
16"	Flange-Rd/Ar-16
18"	Flange-Rd/Ar-18
20"	Flange-Rd/Ar-20
22"	Flange-Rd/Ar-22
24"	Flange-Rd/Ar-24

CLAMP BAND (Galv)
CB-

SIZE	PART #
4"	CB-04
5"	CB-05
6"	CB-06
8"	CB-08
10"	CB-10
12"	CB-12
14"	CB-14
16"	CB-16
18"	CB-18
20"	CB-20
22"	CB-22
24"	CB-24

QUIK CLAMP
QC-

SIZE	
6"	QC-06
8"	QC-08
10"	QC-10
12"	QC-12
14"	QC-14

ROUND SPOUT CAP
Cap-Rd-

SIZE	PART #
4"	Cap-Rd-04(G)
6"	Cap-Rd-06(G)
8"	Cap-Rd-08(G)
10"	Cap-Rd-10(G)
12"	Cap-Rd-12(G)
14"	Cap-Rd-14(G)
16"	Cap-Rd-16(G)
18"	Cap-Rd-18(G)
20"	Cap-Rd-20(G)
24"	Cap-Rd-24(G)

FLAT-TOP ADAPTER
10-Gauge / Galvanized
FTA-

SIZE	PART #
4"	FTA-04-G
6"	FTA-06-G
8"	FTA-08-G
10"	FTA-10-G
12"	FTA-12-G
14"	FTA-14-G
16"	FTA-16-G
18"	FTA-18-G
20"	FTA-20-G
24"	FTA-24-G
30"	FTA-30-G
36"	FTA-36-G

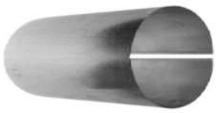

PIPE SLEEVE BOLT-STYLE

PIPE O.D.	PART #
4" x 12"	GK3826
6" x 18"	E5423
6" x 24"	N6309A
8" x 18"	E5424
8" x 30"	Y6029
10" x18"	E5425
10" xv30"	Y5001
12" x 36"	Y1287
13" x 38"	N1309A
14" x 38"	N1409A
16" x 48"	N1609A

PIPE SLEEVE WELD-STYLE
FSA-WOPCON-

PIPE O.D.	PART #
4" x 24"	FSA-WOPCON-04
6" x 24"	FSA-WOPCON-06
8" x 24"	FSA-WOPCON-08
10" x 24"	FSA-WOPCON-10
12" x 24"	FSA-WOPCON-12
14" x 24"	FSA-WOPCON-14

SQUARE FLAT FLANGES
Flange-Sq/Flt-

SIZE	PART #
4"	Flange-Sq/Flt-04
6"	Flange-Sq/Flt-06
8"	Flange-Sq/Flt-08
10"	Flange-Sq/Flt-10
12"	Flange-Sq/Flt-12
14"	Flange-Sq/Flt-14
16"	Flange-Sq/Flt-16
18"	Flange-Sq/Flt-18
20"	Flange-Sq/Flt-20
22"	Flange-Sq/Flt-22
24"	Flange-Sq/Flt-24
26"	Flange-Sq/Flt-26
28"	Flange-Sq/Flt-28
30"	Flange-Sq/Flt-30

SQUARE ANGLE FLANGES
Flange-Sq/Ar-

SIZE	PART #
4"	
6"	Flange-Sq/Ar-06
8"	Flange-Sq/Ar-08
10"	Flange-Sq/Ar-10
12"	Flange-Sq/Ar-12
14"	Flange-Sq/Ar-14
16"	Flange-Sq/Ar-16
18"	Flange-Sq/Ar-18
20"	Flange-Sq/Ar-20
22"	Flange-Sq/Ar-22
24"	Flange-Sq/Ar-24
26"	Flange-Sq/Ar-26
28"	Flange-Sq/Ar-28
30"	Flange-Sq/Ar-30

SQUARE SPOUT CAP (Galv)
Cap-Sq-

SIZE	PART #
4"	
6"	Cap-Sq-06(G)
8"	Cap-Sq-08(G)
10"	Cap-Sq-10(G)
12"	Cap-Sq-12(G)
14"	Cap-Sq-14(G)
16"	Cap-Sq-16(G)
18"	Cap-Sq-18(G)
20"	Cap-Sq-20(G)
22"	Cap-Sq-22(G)
24"	Cap-Sq-24(G)
26"	Cap-Sq-26(G)
28"	Cap-Sq-28(G)
30"	Cap-Sq-30(G)

22.5° ADJUSTABLE ROUND ELBOWS

SIZE	7Ga. Painted	7Ga. Galv.	Add 1/4" Urethane Liner	Add 1/4" Ceramic Tile Lined	Add AR Liner
4"	EB-Rd-04/11-P	EB-Rd-04/11-G			
6"	EB-Rd-06/7-P	EB-Rd-06/7-G	EB-Rd-06-Add Ure	EB-Rd-06-Add Tile	EB-Rd-06-Add AR
8"	EB-Rd-08/7-P	EB-Rd-08/7-G	EB-Rd-08-Add Ure	EB-Rd-08-Add Tile	EB-Rd-08-Add AR
10"	EB-Rd-10/7-P	EB-Rd-10/7-G	EB-Rd-10-Add Ure	EB-Rd-10-Add Tile	EB-Rd-10-Add AR
12"	EB-Rd-12/7-P	EB-Rd-12/7-G	EB-Rd-12-Add Ure	EB-Rd-12-Add Tile	EB-Rd-12-Add AR
14"	EB-Rd-14/7-P	EB-Rd-14/7-G	EB-Rd-14-Add Ure	EB-Rd-14-Add Tile	EB-Rd-14-Add AR

ELBOW SET
(2 Elbows & 3 Clamps)

SIZE	7Ga. Galv. PRICE
4"	EB-Rd-04-Set-G
6"	EB-Rd-06-Set-G
8"	EB-Rd-08-Set-G
10"	EB-Rd-10-Set-G
12"	EB-Rd-12-Set-G
14"	EB-Rd-14-Set-G

ROUND-to-ROUND ADAPTERS

SIZE	7Ga. Painted	7Ga. Galv.	Add 1/4" Urethane Liner	Add 1/4" Ceramic Tile Lined	Add AR Liner
6" to 8"	RD2RD-06/08/P	RD2RD-06/08/G	RD2RD-06/08-Add Ure	RD2RD-06/08-Add Tile	RD2RD-06/08-Add AR
6" to 10"	RD2RD-06/10/P	RD2RD-06/10/G	RD2RD-06/10-Add Ure	RD2RD-06/10-Add Tile	RD2RD-06/10-Add AR
8" to 10"	RD2RD-08/10/P	RD2RD-08/10/G	RD2RD-08/10-Add Ure	RD2RD-08/10-Add Tile	RD2RD-08/10-Add AR
8" to 12"	RD2RD-08/12/P	RD2RD-08/12/G	RD2RD-08/12-Add Ure	RD2RD-08/12-Add Tile	RD2RD-08/12-Add AR
10" to 12"	RD2RD-10/12/P	RD2RD-10/12/G	RD2RD-10/12-Add Ure	RD2RD-10/12-Add Tile	RD2RD-10/12-Add AR
12" to 14"	RD2RD-12/14/P	RD2RD-12/14/G	RD2RD-12/14-Add Ure	RD2RD-12/14-Add Tile	RD2RD-12/14-Add AR
14" to 16"	RD2RD-14/16/P	RD2RD-14/16/G	RD2RD-14/16-Add Ure	RD2RD-14/16-Add Tile	RD2RD-14/16-Add AR

SQUARE-to-ROUND ADAPTERS

SIZE	7Ga. Painted	7Ga. Galv.	Add 1/4" Urethane Liner	Add 1/4" Ceramic Tile Lined	Add AR Liner
4" to 4"	SQ2RD-04/04/10/P	SQ2RD-04/04/10/G	SQ2RD-04/04-Add Ure	SQ2RD-04/04-Add Tile	SQ2RD-04/04-Add AR
6" to 4"	SQ2RD-06/04/10/P	SQ2RD-06/04/10/G	SQ2RD-06/04-Add Ure	SQ2RD-06/04-Add Tile	SQ2RD-06/04-Add AR
6" to 6"	SQ2RD-06/06/7/P	SQ2RD-06/06/7/G	SQ2RD-06/06-Add Ure	SQ2RD-06/06-Add Tile	SQ2RD-06/06-Add AR
6" to 8"	SQ2RD-06/08/7/P	SQ2RD-06/08/7/G	SQ2RD-06/08-Add Ure	SQ2RD-06/08-Add Tile	SQ2RD-06/08-Add AR
8" to 8"	SQ2RD-08/08/7/P	SQ2RD-08/08/7/G	SQ2RD-08/08-Add Ure	SQ2RD-08/08-Add Tile	SQ2RD-08/08-Add AR
8" to 10"	SQ2RD-08/10/7/P	SQ2RD-08/10/7/G	SQ2RD-08/10-Add Ure	SQ2RD-08/10-Add Tile	SQ2RD-08/10-Add AR
10" to 10"	SQ2RD-10/10/7/P	SQ2RD-10/10/7/G	SQ2RD-10/10-Add Ure	SQ2RD-10/10-Add Tile	SQ2RD-10/10-Add AR
10" to 12"	SQ2RD-10/12/7/P	SQ2RD-10/12/7/G	SQ2RD-10/12-Add Ure	SQ2RD-10/12-Add Tile	SQ2RD-10/12-Add AR
12" to 12"	SQ2RD-12/12/7/P	SQ2RD-12/12/7/G	SQ2RD-12/12-Add Ure	SQ2RD-12/12-Add Tile	SQ2RD-12/12-Add AR
12" to 14"	SQ2RD-12/14/7/P	SQ2RD-12/14/7/G	SQ2RD-12/14-Add Ure	SQ2RD-12/14-Add Tile	SQ2RD-12/14-Add AR
14" to 14"	SQ2RD-14/14/7/P	SQ2RD-14/14/7/G	SQ2RD-14/14-Add Ure	SQ2RD-14/14-Add Tile	SQ2RD-14/14-Add AR
14" to 16"	SQ2RD-14/16/7/P	SQ2RD-14/16/7/G	SQ2RD-14/16-Add Ure	SQ2RD-14/16-Add Tile	SQ2RD-14/16-Add AR
16" to 16"	SQ2RD-16/16/7/P	SQ2RD-16/16/7/G	SQ2RD-16/16-Add Ure	SQ2RD-16/16-Add Tile	SQ2RD-16/16-Add AR
16" to 18"	SQ2RD-16/18/7/P	SQ2RD-16/18/7/G	SQ2RD-16/18-Add Ure	SQ2RD-16/18-Add Tile	SQ2RD-16/18-Add AR

SQUARE-to-SQUARE ADAPTERS

SQ2SQ-

SIZE	7Ga. Painted	7Ga. Galv.	Add 1/4" Urethane Liner	Add 1/4" Ceramic Tile Lined	Add AR Liner
6" to 8"	SQ2SQ-06/08/P	SQ2SQ-06/08/G	SQ2SQ-06/08-Add Ure	SQ2SQ-06/08-Add Tile	SQ2SQ-06/08-Add AR
8" to 10"	SQ2SQ-08/10/P	SQ2SQ-08/10/G	SQ2SQ-08/10-Add Ure	SQ2SQ-08/10-Add Tile	SQ2SQ-08/10-Add AR
10" to 12"	SQ2SQ-10/12/P	SQ2SQ-10/12/G	SQ2SQ-10/12-Add Ure	SQ2SQ-10/12-Add Tile	SQ2SQ-10/12-Add AR
12" to 14"	SQ2SQ-12/14/P	SQ2SQ-12/14/G	SQ2SQ-12/14-Add Ure	SQ2SQ-12/14-Add Tile	SQ2SQ-12/14-Add AR
14" to 16"	SQ2SQ-14/16/P	SQ2SQ-14/16/G	SQ2SQ-14/16-Add Ure	SQ2SQ-14/16-Add Tile	SQ2SQ-14/16-Add AR
16" to 18"	SQ2SQ-16/18/P	SQ2SQ-16/18/G	SQ2SQ-16/18-Add Ure	SQ2SQ-16/18-Add Tile	SQ2SQ-16/18-Add AR

45° Y-STYLE ROUND BRANCH *Part #: Branch-Y-Rd-*

SIZE		10 Ga.	7 Ga.		
6"	Galv.	Branch-Y-Rd-06/10/45-G	Branch-Y-Rd-06/7/45-G	Branch-Y-Rd-06-Add Ure	Branch-Y-Rd-06-Add Tile
	Painted	Branch-Y-Rd-06/10/45-P	Branch-Y-Rd-06/7/45-P		
8"	Galv.	Branch-Y-Rd-08/10/45-G	Branch-Y-Rd-08/7/45-G	Branch-Y-Rd-08-Add Ure	Branch-Y-Rd-08-Add Tile
	Painted	Branch-Y-Rd-08/10/45-P	Branch-Y-Rd-08/7/45-P		
10"	Galv.	Branch-Y-Rd-10/10/45-G	Branch-Y-Rd-10/7/45-G	Branch-Y-Rd-10-Add Ure	Branch-Y-Rd-10-Add Tile
	Painted	Branch-Y-Rd-10/10/45-P	Branch-Y-Rd-10/7/45-P		
12"	Galv.	Branch-Y-Rd-12/10/45-G	Branch-Y-Rd-12/7/45-G	Branch-Y-Rd-12-Add Ure	Branch-Y-Rd-12-Add Tile
	Painted	Branch-Y-Rd-12/10/45-P	Branch-Y-Rd-12/7/45-P		
14"	Galv.	Branch-Y-Rd-14/10/45-G	Branch-Y-Rd-14/7/45-G	Branch-Y-Rd-14-Add Ure	Branch-Y-Rd-14-Add Tile
	Painted	Branch-Y-Rd-14/10/45-P	Branch-Y-Rd-14/7/45-P		

45° OFFSET ROUND BRANCH *Part #: Branch-Off-Rd-*

SIZE		10 Ga.	7 Ga.		
6"	Galv.	Branch-Off-Rd-06/10/45-G	Branch-Off-Rd-06/7/45-G	Branch-Off-Rd-06-Add Ure	Branch-Off-Rd-06-Add Tile
	Painted	Branch-Off-Rd-06/10/45-P	Branch-Off-Rd-06/7/45-P		
8"	Galv.	Branch-Off-Rd-08/10/45-G	Branch-Off-Rd-08/7/45-G	Branch-Off-Rd-08-Add Ure	Branch-Off-Rd-08-Add Tile
	Painted	Branch-Off-Rd-08/10/45-P	Branch-Off-Rd-08/7/45-P		
10"	Galv.	Branch-Off-Rd-10/10/45-G	Branch-Off-Rd-10/7/45-G	Branch-Off-Rd-10-Add Ure	Branch-Off-Rd-10-Add Tile
	Painted	Branch-Off-Rd-10/10/45-P	Branch-Off-Rd-10/7/45-P		
12"	Galv.	Branch-Off-Rd-12/10/45-G	Branch-Off-Rd-12/7/45-G	Branch-Off-Rd-12-Add Ure	Branch-Off-Rd-12-Add Tile
	Painted	Branch-Off-Rd-12/10/45-P	Branch-Off-Rd-12/7/45-P		
14"	Galv.	Branch-Off-Rd-14/10/45-G	Branch-Off-Rd-14/7/45-G	Branch-Off-Rd-14-Add Ure	Branch-Off-Rd-14-Add Tile
	Painted	Branch-Off-Rd-14/10/45-P	Branch-Off-Rd-14/7/45-P		

45° ROUND DEADSTOP *Part #: Deadstop-Rd-*

SIZE		10 Ga.	7 Ga.		
6"	Galv.	Deadstop-Rd-06/10/45-G	Deadstop-Rd-06/7/45-G	Deadstop-Rd-06-Add Ure	Deadstop-Rd-06-Add Tile
	Painted	Deadstop-Rd-06/10/45-P	Deadstop-Rd-06/7/45-P		
8"	Galv.	Deadstop-Rd-08/10/45-G	Deadstop-Rd-08/7/45-G	Deadstop-Rd-08-Add Ure	Deadstop-Rd-08-Add Tile
	Painted	Deadstop-Rd-08/10/45-P	Deadstop-Rd-08/7/45-P		
10"	Galv.	Deadstop-Rd-10/10/45-G	Deadstop-Rd-10/7/45-G	Deadstop-Rd-10-Add Ure	Deadstop-Rd-10-Add Tile
	Painted	Deadstop-Rd-10/10/45-P	Deadstop-Rd-10/7/45-P		
12"	Galv.	Deadstop-Rd-12/10/45-G	Deadstop-Rd-12/7/45-G	Deadstop-Rd-12-Add Ure	Deadstop-Rd-12-Add Tile
	Painted	Deadstop-Rd-12/10/45-P	Deadstop-Rd-12/7/45-P		
14"	Galv.	Deadstop-Rd-14/10/45-G	Deadstop-Rd-14/7/45-G	Deadstop-Rd-14-Add Ure	Deadstop-Rd-14-Add Tile
	Painted	Deadstop-Rd-14/10/45-P	Deadstop-Rd-14/7/45-P		

45° ROUND DEADSTOP *w/ Removable End Cap* *Part #: Branch-3W-Rd-*

SIZE		10 Ga.	7 Ga.		
6"	Galv.	Branch-3W-Rd-06/10/45-G	Branch-3W-Rd-06/7/45-G	Branch-3W-Rd-06-Add Ure	Branch-3W-Rd-06-Add Tile
	Painted	Branch-3W-Rd-06/10/45-P	Branch-3W-Rd-06/7/45-P		
8"	Galv.	Branch-3W-Rd-08/10/45-G	Branch-3W-Rd-08/7/45-G	Branch-3W-Rd-08-Add Ure	Branch-3W-Rd-08-Add Tile
	Painted	Branch-3W-Rd-08/10/45-P	Branch-3W-Rd-08/7/45-P		
10"	Galv.	Branch-3W-Rd-10/10/45-G	Branch-3W-Rd-10/7/45-G	Branch-3W-Rd-10-Add Ure	Branch-3W-Rd-10-Add Tile
	Painted	Branch-3W-Rd-10/10/45-P	Branch-3W-Rd-10/7/45-P		
12"	Galv.	Branch-3W-Rd-12/10/45-G	Branch-3W-Rd-12/7/45-G	Branch-3W-Rd-12-Add Ure	Branch-3W-Rd-12-Add Tile
	Painted	Branch-3W-Rd-12/10/45-P	Branch-3W-Rd-12/7/45-P		
14"	Galv.	Branch-3W-Rd-14/10/45-G	Branch-3W-Rd-14/7/45-G	Branch-3W-Rd-14-Add Ure	Branch-3W-Rd-14-Add Tile
	Painted	Branch-3W-Rd-14/10/45-P	Branch-3W-Rd-14/7/45-P		

SQUARE FIXED ELBOW, HIP-STYLE 45°

Part #: EB-SqH-

SIZE	10Ga. Painted	10Ga. Galv.	7Ga. Painted	7Ga. Galv.	Add Urethane	Add Ceramic Tile	Add AR
6"	06/10/45-P	06/10/45-G	06/7/45-P	06/7/45-G	06-Add Ure	06-Add Tile	06-Add AR
8"	08/10/45-P	08/10/45-G	08/7/45-P	08/7/45-G	08-Add Ure	08-Add Tile	08-Add AR
10"	10/10/45-P	10/10/45-G	10/7/45-P	10/7/45-G	10-Add Ure	10-Add Tile	10-Add AR
12"	12/10/45-P	12/10/45-G	12/7/45-P	12/7/45-G	12-Add Ure	12-Add Tile	12-Add AR
14"	14/10/45-P	14/10/45-G	14/7/45-P	14/7/45-G	14-Add Ure	14-Add Tile	14-Add AR

SQUARE 45° BRANCHES (Y or K STYLE - Specify When Ordering)

Part #: Branch-K-Sq-

SIZE	10Ga. Painted	10Ga. Galv.	7Ga. Painted	7Ga. Galv.	Add Urethane	Add Ceramic Tile	Add AR
6"	06/10/45-P	06/10/45-G	06/7/45-P	06/7/45-G	06-Add Ure	06-Add Tile	06-Add AR
8"	08/10/45-P	08/10/45-G	08/7/45-P	08/7/45-G	08-Add Ure	08-Add Tile	08-Add AR
10"	10/10/45-P	10/10/45-G	10/7/45-P	10/7/45-G	10-Add Ure	10-Add Tile	10-Add AR
12"	12/10/45-P	12/10/45-G	12/7/45-P	12/7/45-G	12-Add Ure	12-Add Tile	12-Add AR
14"	14/10/45-P	14/10/45-G	14/7/45-P	14/7/45-G	14-Add Ure	14-Add Tile	14-Add AR

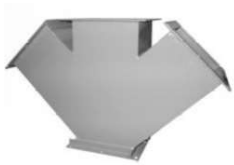

SQUARE 45° THREE-WAY BRANCHES

Part #: Branch-3W-Sq-

SIZE	10Ga. Painted	10Ga. Galv.	7Ga. Painted	7Ga. Galv.	Add Urethane	Add Ceramic Tile	Add AR
6"	06/10/45-P	06/10/45-G	06/7/45-P	06/7/45-G	06-Add Ure	06-Add Tile	06-Add AR
8"	08/10/45-P	08/10/45-G	08/7/45-P	08/7/45-G	08-Add Ure	08-Add Tile	08-Add AR
10"	10/10/45-P	10/10/45-G	10/7/45-P	10/7/45-G	10-Add Ure	10-Add Tile	10-Add AR
12"	12/10/45-P	12/10/45-G	12/7/45-P	12/7/45-G	12-Add Ure	12-Add Tile	12-Add AR
14"	14/10/45-P	14/10/45-G	14/7/45-P	14/7/45-G	14-Add Ure	14-Add Tile	14-Add AR

SQUARE 45° DEADSTOP w/ REMOVABLE END CAP

Part #: Deadstop-Sq-

SIZE	10Ga. Painted	10Ga. Galv.	7Ga. Painted	7Ga. Galv.	Add Urethane	Add Ceramic Tile	Add AR
6"	06/10/45-P	06/10/45-G	06/7/45-P	06/7/45-G	06-Add Ure	06-Add Tile	06-Add AR
8"	08/10/45-P	08/10/45-G	08/7/45-P	08/7/45-G	08-Add Ure	08-Add Tile	08-Add AR
10"	10/10/45-P	10/10/45-G	10/7/45-P	10/7/45-G	10-Add Ure	10-Add Tile	10-Add AR
12"	12/10/45-P	12/10/45-G	12/7/45-P	12/7/45-G	12-Add Ure	12-Add Tile	12-Add AR
14"	14/10/45-P	14/10/45-G	14/7/45-P	14/7/45-G	14-Add Ure	14-Add Tile	14-Add AR

SQUARE TURNDOWN for LOADOUT SPOUT

Part #: Turndown-

SIZE	10Ga. Painted	10Ga. Galv.	7Ga. Painted	7Ga. Galv.	Add Urethane	Add Ceramic Tile	Add AR
6"	06/10/45-Sq/P	06/10/45-Sq/G	06/7/45-Sq/P	06/7/45-Sq/G	06-Add Ure	06-Add Tile	06-Add AR
8"	08/10/45-Sq/P	08/10/45-Sq/G	08/7/45-Sq/P	08/7/45-Sq/G	08-Add Ure	08-Add Tile	08-Add AR
10"	10/10/45-Sq/P	10/10/45-Sq/G	10/7/45-Sq/P	10/7/45-Sq/G	10-Add Ure	10-Add Tile	10-Add AR
12"	12/10/45-Sq/P	12/10/45-Sq/G	12/7/45-Sq/P	12/7/45-Sq/G	12-Add Ure	12-Add Tile	12-Add AR
14"	14/10/45-Sq/P	14/10/45-Sq/G	14/7/45-Sq/P	14/7/45-Sq/G	14-Add Ure	14-Add Tile	14-Add AR

STAINLESS STEEL ANGLE RING FLANGES	
SIZE	PART #
4"	Flange-Rd/ArSST-04
6"	Flange-Rd/ArSST-06
8"	Flange-Rd/ArSST-08
10"	Flange-Rd/ArSST-10
12"	Flange-Rd/ArSST-12
14"	Flange-Rd/ArSST-14
16"	Flange-Rd/ArSST-16
18"	Flange-Rd/ArSST-18
20"	Flange-Rd/ArSST-20
24"	Flange-Rd/ArSST-24

STAINLESS STEEL CLAMP BAND	
SIZE	PART #
4"	CBSST-04
6"	CBSST-06
8"	CBSST-08
10"	CBSST-10
12"	CBSST-12
14"	CBSST-14
16"	CBSST-16

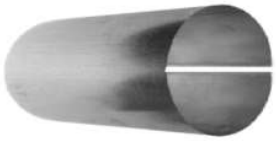

STAINLESS STEEL PIPE SLEEVE WELD-STYLE 24" Long / 12ga.	
PIPE OD	PART #
6"	PS-06/SST
8"	PS-08/SST
10"	PS-10/SST
12"	PS-12/SST
14"	PS-14/SST

STAINLESS STEEL ADJUSTABLE ELBOW	
SIZE	PART #
6"	EB-Rd-06/7-SST
8"	EB-Rd-08/7-SST
10"	EB-Rd-10/7-SST
12"	EB-Rd-12/7-SST
14"	EB-Rd-14/7-SST
16"	EB-Rd-16/7-SST

STAINLESS STEEL SQUARE ANGLE FLANGES	
SIZE	PART #
6"	Flange-Sq/ArSST-06
8"	Flange-Sq/ArSST-08
10"	Flange-Sq/ArSST-10
12"	Flange-Sq/ArSST-12
14"	Flange-Sq/ArSST-14
16"	Flange-Sq/ArSST-16

STAINLESS STEEL SQUARE-to-ROUND 10-Gauge	
SIZE	PART #
4" to 4"	SQ2RDSST-4/4/10
6" to 6"	SQ2RDSST-6/6/10
6" to 8"	SQ2RDSST-6/8/10
8" to 8"	SQ2RDSST-8/8/10
8" to 10"	SQ2RDSST-8/10/10
10" to 10"	SQ2RDSST-10/10/10
10" to 12"	SQ2RDSST-10/12/10
12" to 12"	SQ2RDSST-12/12/10
12" to 14"	SQ2RDSST-12/14/10
14" to 14"	SQ2RDSST-14/14/10
14" to 16"	SQ2RDSST-14/16/10
16" to 16"	SQ2RDSST-16/16/10

STAINLESS STEEL ROUND-to-ROUND 10-Gauge	
SIZE	PART #
6" to 8"	RD2RDSST-6/8
6" to 10"	RD2RDSST-6/10
8" to 10"	RD2RDSST-8/10
8" to 12"	RD2RDSST-8/12
10" to 12"	RD2RDSST-10/12
12" to 14"	RD2RDSST-12/14
14" to 16"	RD2RDSST-14/16

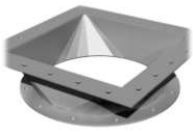

STAINLESS STEEL FLAT-TOP ADAPTER	
PIPE O.D.	PART #
4"	FTA/SST-04
6"	FTA/SST-06
8"	FTA/SST-08
10"	FTA/SST-10
12"	FTA/SST-12
14"	FTA/SST-14

STAINLESS STEEL SQUARE-to-SQUARE 10-Gauge	
SIZE	PART #
6" to 8"	SQ2SQSST-6/8
8" to 10"	SQ2SQSST-8/10
10" to 12"	SQ2SQSST-10/12
12" to 14"	SQ2SQSST-12/14
14" to 16"	SQ2SQSST-14/16
16" to 18"	SQ2SQSST-16/18

PRO GRADE® Magnetic Separators

ERIEZ®

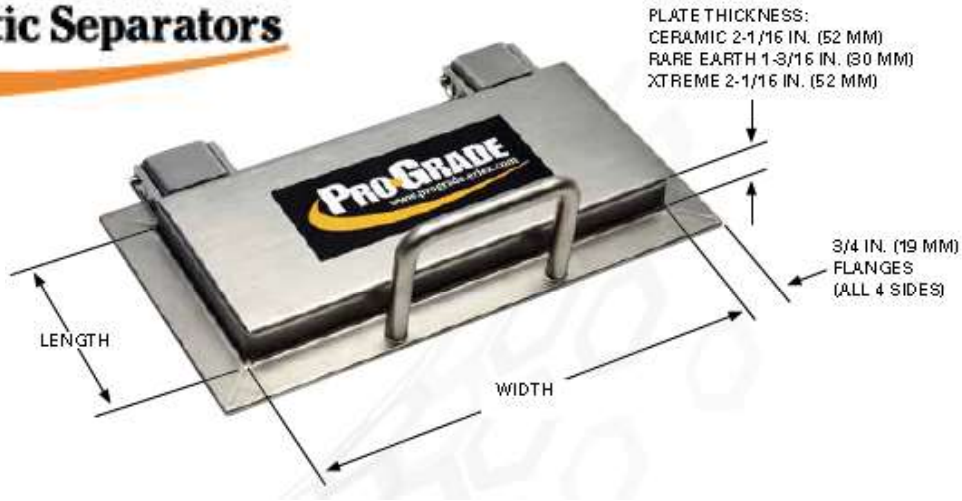

POWER LEVELS

		Designed To Remove
ProGrade Ceramic	Basic protection from tramp metals damaging downstream equipment. Ceramic magnets and quality construction at rock bottom prices.	Medium to Large Tramp Metal
ProGrade Rare Earth	Prevents product contamination and tramp metal damage. Assemblies feature stainless steel construction, high-power rare earth magnets with demanding attention to welds and finish.	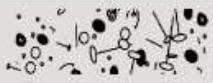 Small Ferrous Contamination

CERAMIC

Width	Length	Weight (lbs)	Part #
6"	7-5/8"	17.2	135711P
8"	7-5/8"	23.8	135667P
10"	7-5/8"	30.4	135712P
12"	7-5/8"	37.0	135668P
16"	7-5/8"	50.3	135713P
20"	7-5/8"	63.5	135714P
24"	7-5/8"	76.7	135715P

RARE EARTH

Width	Length	Weight (lbs)	Part #
6"	5-1/2"	12.3	129906P
8"	5-1/2"	17.2	129908P
10"	5-1/2"	22.0	129910P
12"	5-1/2"	26.9	129912P
14"	5-1/2"	31.7	129914P

Eriez Permanent Plate Magnets, the workhorses of magnetic separation, provide dependable and economical solutions to problems associated with tramp iron contamination in processing lines. Plate Magnets installed in chutes, spouts, ducts, pipes or suspended over conveyors remove tramp iron to help prevent costly shutdowns associated with machinery damage, prevent spark-caused fires and explosions, prevent product contamination and improve product purity.

FEATURES:

- **All stainless steel construction**
- **Smooth face with hinges (Ceramic magnets)**
- **Milled 400 SS step face with hinges (Rare Earth)**
- **Glass bead surface finish**
- **Sanitary finish (Rare Earth)**
- **150° Max Temp (Rare Earth**

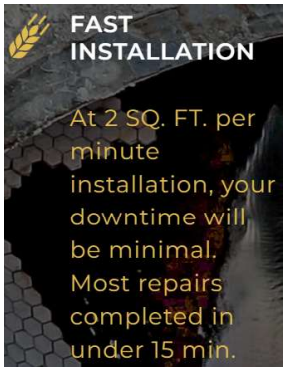

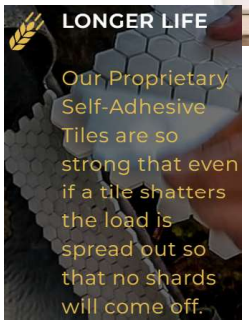

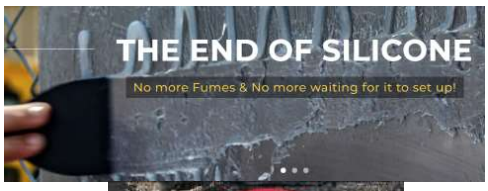

DESCRIPTION	PART #
glassSTEEL™ — Patches Can Be Cut With Scissors, Cures Hard Like Steel In 5 Minutes Or Less and Can Reinforce The AR Steel Patches With No Hot Work	
UV REAL Patch, 3" x 6"	GERP-PatchUV-3x6
UV REAL Patch, 3" x 6" (Case of 48)	GERP-PatchUV-3x6 (48)
UV REAL Patch, 6"x 9"	GERP-PatchUV-6x9
UV REAL Patch, 6"x 9" (Case of 24)	GERP-PatchUV-6x9 (24)
UV REAL Patch, 9" x 12"	GERP-PatchUV-9x12
UV REAL Patch, 9" x 12" (Case of 24)	GERP-PatchUV-9x12 (24)
7oz. UV Ceramic Armor Liquid Packs	GERP-Liquid-07
7oz. UV Ceramic Armor Liquid Packs (Case of 48)	GERP-Liquid-07 (48)
24oz. UV Ceramic Armor Liquid Packs	GERP-Liquid-24
24oz. UV Ceramic Armor Liquid Packs (Case of 24)	GERP-Liquid-24 (24)
Dispenser Gun for 24oz. Armor Liquid Packs	GERP-Dispenser
UV XL Flashlight	GERP-Light
instaGRIP® — Utilizes A State-of-the-Art Manufacturing Process Which Delivers An Instant and Virtually Unbreakable Permanent Bond	
instaGRIP Ceramic Tile Solid, 4" x 3" x 1/4"	GERP-Tile-Solid-4x3x1/4
instaGRIP Ceramic Tile Solid, 4" x 3" x 1/4" (Case of 72)	GERP-Tile-Solid-4x3x1/4 (72)
instaGRIP Ceramic Tile Solid, 4" x 6" x 1/4"	GERP-Tile-Solid-4x6x1/4
instaGRIP Ceramic Tile Solid, 4" x 6" x 1/4" (Case of 36)	GERP-Tile-Solid-4x6x1/4 (36)
instaGRIP HEX Tiles, 6" x 6" x 1/4"	GERP-Tile-Hex-6x6x1/4
instaGRIP HEX Tiles, 6" x 6" x 1/4" (Case of 28)	GERP-Tile-Hex-6x6x1/4 (28)
instaGRIP HEX Tiles, 6" x 6" x 1/8"	GERP-Tile-Hex-6x6x1/8
instaGRIP HEX Tiles, 6" x 6" x 1/8" (Case of 50)	GERP-Tile-Hex-6x6x1/8 (50)
instaGRIP Cuttable Tile Sheet, 20" x 20" x 1/4"	GERP-Tile-Cuttable-20x20x1/4
instaGRIP Cuttable Tile Sheet, 20" x 20" x 1/4" (Case of 3)	GERP-Tile-Cuttable-20x20x1/4 (3)
instaGRIP Cuttable Tile Sheet, 20" x 20" x 1/8"	GERP-Tile-Cuttable-20x20x1/8
instaGRIP Cuttable Tile Sheet, 20" x 20" x 1/8" (Case of 6)	GERP-Tile-Cuttable-20x20x1/8 (6)
instaGRIP Cuttable Tile Sheet, 4" x 6" x 1/4"	GERP-Tile-Cuttable-4x6x1/4
instaGRIP Cuttable Tile Sheet, 4" x 6" x 1/4" (Case of 36)	GERP-Tile-Cuttable-4x6x1/4 (36)
instaGRIP Cuttable Tile Sheet, 4" x 6" x 1/8"	GERP-Tile-Cuttable-4x6x1/8
instaGRIP Cuttable Tile Sheet, 4" x 6" x 1/8" (Case of 60)	GERP-Tile-Cuttable-4x6x1/8 (60)
AR STEEL PLATE PATCH	
InstaGRIP AR Steel Patch Solid, 4" x 3" x 1/4"	GERP-PatchAR-4x3x1/4
InstaGRIP AR Steel Patch Solid, 4" x 3" x 1/4" (Case of 40)	GERP-PatchAR-4x3x1/4 (40)
instaGRIP AR Steel Patch Solid, 4" x 3" x 1/8"	GERP-PatchAR-4x3x1/8
instaGRIP AR Steel Patch Solid, 4" x 3" x 1/8" (Case of 80)	GERP-PatchAR-4x3x1/8 (80)
InstaGRIP AR Steel Patch Solid, 4" x 6" x 1/4"	GERP-PatchAR-4x6x1/4
InstaGRIP AR Steel Patch Solid, 4" x 6" x 1/4" (Case of 20)	GERP-PatchAR-4x6x1/4 (20)
instaGRIP AR Steel Patch Solid, 4" x 6" x 1/8"	GERP-PatchAR-4x6x1/8
instaGRIP AR Steel Patch Solid, 4" x 6" x 1/8" (Case of 40)	GERP-PatchAR-4x6x1/8 (40)
instaGRIP AR Steel Patch Cuttable, 4" x 6" x 1/8"	GERP-PatchAR(Cut)-4x6x1/8
instaGRIP AR Steel Patch Cuttable, 4" x 6" x 1/8" (Case of 40)	GERP-PatchAR(Cut)-4x6x1/8 (40)

ABRASION RESISTANT LINERS

BLACK REPRO UHMW (Full Sheet = 4' x 10') LINER-BK

THICKNESS	PART #	PART #
1/8"	Liner-BK-1/8-UHMW(Sq-Ft)	Liner-BK-1/8-UHMW(4x10)
1/4"	Liner-BK-1/4-UHMW(Sq-Ft)	Liner-BK-1/4-UHMW(4x10)
1/2"	Liner-BK-1/2-UHMW(Sq.Ft.)	Liner-BK-1/2-UHMW(4x10)

Black UHMW has a slightly lower tensile strength than virgin white UHMW. Unless requested for food grade applications, black is a better value and will have approximately the same lifespan.

WHITE VIRGIN UHMW (Full Sheet = 4' x 10') LINER-WT

THICKNESS		
1/8"	Liner-WT-1/8-UHMW(Sq.Ft.)	Liner-WT-1/8-UHMW(4x10)
1/4" *	Liner-WT-1/4-UHMW(Sq.Ft.)*	Liner-WT-1/4-UHMW(4x10)*
1/2"	Liner-WT-1/2-UHMW(Sq.Ft.)	Liner-WT-1/2-UHMW(4x10)

Machinable thermoplastic widely used across many industries.
Extremely resistant to abrasion and moisture absorption. FDA and USDA complaint.

RHINO HYDE® BLUE URETHANE (Full Sheet = 4' x 10') Liner-BL-

THICKNESS	PLAIN BACK		FABRIC BACK		EXPANDED METAL BACK	
	PART #	PART #	PART #	PART #	PART #	PART #
1/4"	1/4-Plain(Sq.Ft.)	1/4-Plain(4x10)	1/4-Fabric(Sq.Ft.)	1/4-Fabric(4x10)	1/4-XMetal(Sq.Ft.)	1/4-XMetal(4x10)
5/16"	5/16-Plain(Sq.Ft.)	5/16-Plain(4x10)	5/16-Fabric(Sq.Ft.)	5/16-Fabric(4x10)	5/16-XMetal(Sq.Ft.)	5/16-XMetal(4x10)
3/8"	3/8-Plain(Sq.Ft.)	3/8-Plain(4x10)	3/8-Fabric(Sq.Ft.)	3/8-Fabric(4x10)	3/8-XMetal(Sq.Ft.)	3/8-XMetal(4x10)
1/2"	1/2-Plain(Sq.Ft.)	1/2-Plain(4x10)	1/2-Fabric(Sq.Ft.)	1/2-Fabric(4x10)	1/2-XMetal(Sq.Ft.)	1/2-XMetal(4x10)
3/4"	3/4-Plain(Sq.Ft.)	3/4-Plain(4x10)	3/4-Fabric(Sq.Ft.)	3/4-Fabric(4x10)	3/4-XMetal(Sq.Ft.)	3/4-XMetal(4x10)
1"	1-Plain(Sq.Ft.)	1-Plain(4x10)	1-Fabric(Sq.Ft.)	1-Fabric(4x10)	1-XMetal(Sq.Ft.)	1-XMetal(4x10)

FDA compliant for dry bulk food handling. Resists corrosion, abrasion and chemicals. Will not expand or contract with temperature changes. Low coefficient of friction. Lightweight build and excellent performance in a wide range of temperature.

RHINO HYDE® HIGH ENERGY ORANGE URETHANE (Full Sheet = 4' x 10') LINER-OR-

THICKNESS	PLAIN BACK		FABRIC BACK		EXPANDED METAL BACK	
	PART #	PART #	PART #	PART #	PART #	PART #
1/4" *	1/4-Plain(Sq.Ft.)	1/4-Plain(4x10)	1/4-Fabric(Sq.Ft.)	1/4-Fabric(4x10)	1/4-XMetal(Sq.Ft.)*	1/4-XMetal(4x10)*
5/16"	5/16-Plain(Sq.Ft.)	5/16-Plain(4x10)	5/16-Fabric(Sq.Ft.)	5/16-Fabric(4x10)	5/16-XMetal(Sq.Ft.)*	5/16-XMetal(4x10)*
3/8"	3/8-Plain(Sq.Ft.)	3/8-Plain(4x10)	3/8-Fabric(Sq.Ft.)	3/8-Fabric(4x10)	3/8-XMetal(Sq.Ft.)	3/8-XMetal(4x10)
1/2"	1/2-Plain(Sq.Ft.)	1/2-Plain(4x10)	1/2-Fabric(Sq.Ft.)	1/2-Fabric(4x10)	1/2-XMetal(Sq.Ft.)	1/2-XMetal(4x10)
3/4"	3/4-Plain(Sq.Ft.)	3/4-Plain(4x10)	3/4-Fabric(Sq.Ft.)	3/4-Fabric(4x10)	3/4-XMetal(Sq.Ft.)	3/4-XMetal(4x10)
1"	1-Plain(Sq.Ft.)	1-Plain(4x10)	1-Fabric(Sq.Ft.)	1-Fabric(4x10)	1-XMetal(Sq.Ft.)	1-XMetal(4x10)

Specially designed for small particle (grain, fertilizer, sand and other fine particles) impingement abration and top choice for use in humid, damp and wet locations. FDA compliant for dry bulk food handling. High rebound characteristics that reduce wear and product damage. Low coefficient of friction for less sticking and build-up.

RED KRYPTANE® URETHANE (Full Sheet = 4' x 10') LINER-RD-

THICKNESS	PLAIN BACK		FABRIC BACK		EXPANDED METAL BACK	
	PART #	PART #	PART #	PART #	PART #	PART #
1/4" *	1/4-Plain(Sq.Ft.)	1/4-Plain(4x10)	1/4-Fabric(Sq.Ft.)*	1/4-Fabric(4x10)*	1/4-XMetal(Sq.Ft.)*	1/4-XMetal(4x10)*
5/16"	5/16-Plain(Sq.Ft.)	5/16-Plain(4x10)	5/16-Fabric(Sq.Ft.)	5/16-Fabric(4x10)	5/16-XMetal(Sq.Ft.)	5/16-XMetal(4x10)
3/8"	3/8-Plain(Sq.Ft.)	3/8-Plain(4x10)	3/8-Fabric(Sq.Ft.)	3/8-Fabric(4x10)	3/8-XMetal(Sq.Ft.)	3/8-XMetal(4x10)
1/2"	1/2-Plain(Sq.Ft.)	1/2-Plain(4x10)	1/2-Fabric(Sq.Ft.)	1/2-Fabric(4x10)	1/2-XMetal(Sq.Ft.)	1/2-XMetal(4x10)
5/8"	5/8-Plain(Sq.Ft.)	5/8-Plain(4x10)	5/8-Fabric(Sq.Ft.)	5/8-Fabric(4x10)	5/8-XMetal(Sq.Ft.)	5/8-XMetal(4x10)
3/4"	3/4-Plain(Sq.Ft.)	3/4-Plain(4x10)	3/4-Fabric(Sq.Ft.)	3/4-Fabric(4x10)	3/4-XMetal(Sq.Ft.)	3/4-XMetal(4x10)
1"	1-Plain(Sq.Ft.)	1-Plain(4x10)	1-Fabric(Sq.Ft.)	1-Fabric(4x10)	1-XMetal(Sq.Ft.)	1-XMetal(4x10)

Most complete wear protection for your equipment. Incredibly high split-tear resistance, reduced product adhesion due to low coefficient of friction, flexibility aids in proper fit. Elastomeric properties reduce breakage of and damage to the conveyed product. Typical applications include bins, hoppers, turnheads, chutes and discharges to name a few.

Solid Metal Back and Ceramic Chip Liners Available As Well As Larger 4' x 50' Rolls In Some Products
Call For Pricing (Special Order)

6 - ELEVATOR ACCESSORIES

Cushion Boxes & Valves	2-3
Slide Gates	4-5
Distributor Pipe Assembly	6
Manwalks / Calkwalks	6
Cable & Accessories	7
Belting & Splices	8-9
Elevator Buckets & Hardware	10-15

3 Way Pan Valve

2 Way Offset Pan Valve

2 Way Offset Flipper Valve

2 Way X Style Flipper Valve

Inline Steam Vent

Cushion Boxes

3 Way Pendulum Valve

Inline Flow Reducer

CUSHION BOXES / VALVES

When Ordering, Replace "XX" With The Size You Need (i.e. 06 for 6")

PART #	*DESCRIPTION*	*6"*	*8"*	*10"*	*12"*	*14"*
FSA-2WVAL-OS-XX	2-Way Offset Valve (less cable)	FSA-2WVAL-OS-06	FSA-2WVAL-OS-08	FSA-2WVAL-OS-10	FSA-2WVAL-OS-12	FSA-2WVAL-OS-14
FSA-2WVAL-XX	2-Way Valve (less cable)	FSA-2WVAL-06	FSA-2WVAL-08	FSA-2WVAL-10	FSA-2WVAL-12	FSA-2WVAL-14
FSA-2WPAN-OS-XX	2-Way Offset Pan Valve (less cable)	FSA-2WPAN-OS-06	FSA-2WPAN-OS-08	FSA-2WPAN-OS-10	FSA-2WPAN-OS-12	FSA-2WPAN-OS-14
FSA-2WPAN-XX	2-Way Pan Valve (less cable)	FSA-2WPAN-06	FSA-2WPAN-08	FSA-2WPAN-10	FSA-2WPAN-12	FSA-2WPAN-14
FSA-3WVAL-XX	3-Way Valve (less cable)	FSA-3WVAL-06	FSA-3WVAL-08	FSA-3WVAL-10	FSA-3WVAL-12	FSA-3WVAL-14
FSA-3WPAN-XX	3-Way Pan Valve (less cable)	FSA-3WPAN-06	FSA-3WPAN-08	FSA-3WPAN-10	FSA-3WPAN-12	FSA-3WPAN-14
FSA-3WPEN-XX	3-Way Pendulum Valve (less cable)	FSA-3WPEN-06	FSA-3WPEN-08	FSA-3WPEN-10	FSA-3WPEN-12	FSA-3WPEN-14
FSA-AFILR-XX	Inline Flow Reducer (adjustable flow)	FSA-AFILR-06	FSA-AFILR-08	FSA-AFILR-10	FSA-AFILR-12	FSA-AFILR-14
FSA-OFVAL-XX	Over Flow Valve	FSA-OFVAL-06	FSA-OFVAL-08	FSA-OFVAL-10	FSA-OFVAL-12	FSA-OFVAL-14
FSA-ACBOX-XX	Adjustable Cushion Box (with flow control)	FSA-ACBOX-06	FSA-ACBOX-08	FSA-ACBOX-10	FSA-ACBOX-12	FSA-ACBOX-14

Required Cable Length:
2-Way Valves - 1/8" Cable: Valve Height (from ground) x 2 Plus 2 Weights
3-Way Valves - 1/8" Cable: Valve Height (from ground) x 4 Plus 4 Weights

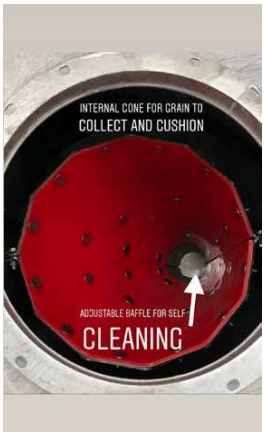

DBAR CUSHION BAR (Galvanized)

SIZE	PART #	1/4" URETHANE LINED CONE	1/4" KRYPTANE LINED CONE	X-TREME GREEN LINED CONE
8"	DBAR0808GD	DBAR0808GDU	DBAR0808GDK	DBAR0808GDEG
10"	DBAR1008GD	DBAR1008GDU	DBAR1008GDK	DBAR1008GDEG
12"	DBAR1208GD	DBAR1208GDU	DBAR1208GDK	DBAR1208GDEG
14"	DBAR1408GD	DBAR1408GDU	DBAR1408GDK	DBAR1408GDEG
16"	---------->	DBAR1608GDU	DBAR1608GDK	DBAR1608GDEG
18"	---------->	DBAR1808GDU	DBAR1808GDK	DBAR1808GDEG
20"	---------->	DBAR2008GDU	DBAR2008GDK	DBAR2008GDEG

STANDARD OVER-FLOW VALVE

SIZE	*7Ga. Galv.*	*Add Urethane*	*Add Ceramic Tile*	*Add AR*
6"	Valve-06-OF	Valve-06-Add Ure	Valve-06-Add Tile	Valve-06-Add AR
8"	Valve-08-OF	Valve-08-Add Ure	Valve-08-Add Tile	Valve-08-Add AR
10"	Valve-10-OF	Valve-10-Add Ure	Valve-10-Add Tile	Valve-10-Add AR
12"	Valve-12-OF	Valve-12-Add Ure	Valve-12-Add Tile	Valve-12-Add AR
14"	Valve-14-OF	Valve-14-Add Ure	Valve-14-Add Tile	Valve-14-Add AR

STANDARD OVER-FLOW w/ 45° Slide Gate *Valve-*

SIZE	*7Ga. Galv.*	*Add Urethane*	*Add Ceramic Tile*	*Add AR*
6"	Valve-06-OFG	Valve-06-Add Ure	Valve-06-Add Tile	Valve-06-Add AR
8"	Valve-08-OFG	Valve-08-Add Ure	Valve-08-Add Tile	Valve-08-Add AR
10"	Valve-10-OFG	Valve-10-Add Ure	Valve-10-Add Tile	Valve-10-Add AR
12"	Valve-12-OFG	Valve-12-Add Ure	Valve-12-Add Tile	Valve-12-Add AR
14"	Valve-14-OFG	Valve-14-Add Ure	Valve-14-Add Tile	Valve-14-Add AR

OVER-FLOW VALVE w/ Internal Diverter Gate *MW-OFV-*

SIZE	*7Ga. Galv.*	*Add Urethane*	*Add Ceramic Tile*	*Add AR*
8"	MW-OFV-08	Valve-08-Add Ure	Valve-08-Add Tile	Valve-08-Add AR
10"	MW-OFV-10	Valve-10-Add Ure	Valve-10-Add Tile	Valve-10-Add AR
12"	MW-OFV-12	Valve-12-Add Ure	Valve-12-Add Tile	Valve-12-Add AR
14"	MW-OFV-14	Valve-14-Add Ure	Valve-14-Add Tile	Valve-14-Add AR

MANUAL SLIDE GATES

Galvanized with Rack & Pinions, Square Inlet/Outlet-Can Be Made Round By Adding Square to Round Adapter
Hand Wheel w/ Chain or Cable Wheel Not Included

SIZE	PART #	PART #	WEATHER COVER (10 Gauge) PART#
6"	SG-06/10M	SG-06/08M	SG-WC-06
8"	SG-08/10M	SG-08/08M	SG-WC-08
10"	SG-10/10M	SG-10/08M	SG-WC-10
12"	SG-12/10M	SG-12/08M	SG-WC-12
14"	SG-12/10M	SG-14/08M	SG-WC-14
16"		SG-16/08M	SG-WC-16
18"		SG-18/08M	SG-WC-18
20"		SG-20/08M	SG-WC-20
22"		SG-22/08M	SG-WC-22
24"		SG-24/08M	SG-WC-24

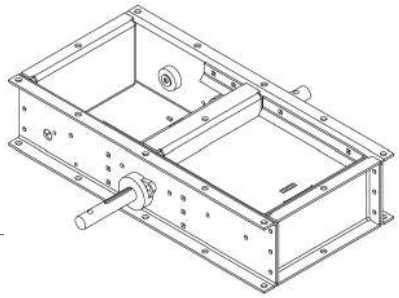

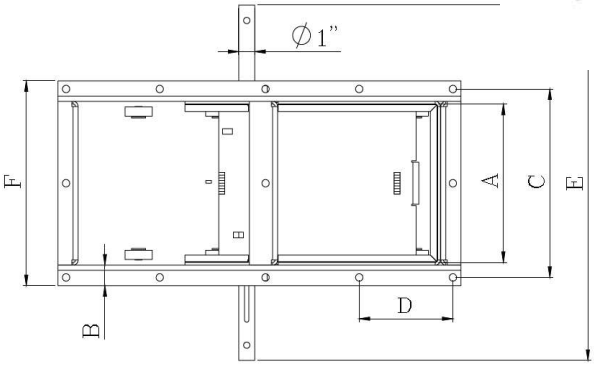

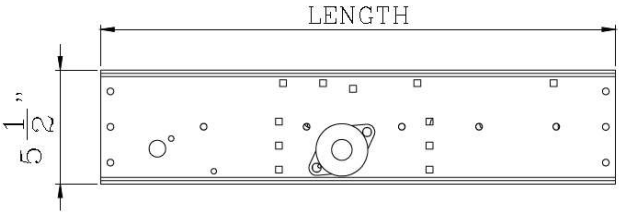

PART #	(A) Nominal Size	B	C	D	E	F	LENGTH
SG-06	6	1-1/4"	7-5/8"	3-13/16	18	8-5/8	17
SG-08	8	1-1/4"	9-5/8"	4-13/16	20	10-5/8	21
SG-10	10	1-1/4"	11-5/8"	5-13/16	22	12-5/8	25
SG-12	12	1-1/2"	14	4-21/32	24	15-1/8	29-1/2
SG-14	14	1-1/2"	16	4	26	17-1/8	33-1/2
SG-16	16	1-1/2"	18	4-1/2	28	19-1/8	37-1/2
SG-18	18	1-1/2"	20	5	30	21-1/8	41-1/2
SG-20	20	1-1/2"	22	5-1/2	32	23-1/8	45-1/2
SG-22	22	1-1/2"	24	4	34	25-1/8	49-1/2
SG-24	24	1-1/2"	26	4-21/64	36	27-1/8	53-1/2

ELECTRIC SLIDE GATES

Galvanized with Rack & Pinions, Square Inlet/Outlet-Can Be Made Round By Adding Square to Round Adapter

Includes: (1) Gearbox, (1) Motor, (2) Limit Switches

SIZE	1/3HP 1-Phase 10-Gauge PART #	1/3HP 3-Phase 8-Gauge PART #	1/3HP 1-Phase Explosion-Proof 10-Gauge PART#	1/3HP 3-Phase Explosion-Proof 10-Gauge PART#
6"	SG-06/10E	SG-06/08E	SG-06/10EX	SG-06/08EX
8"	SG-08/10E	SG-08/08E	SG-08/10EX	SG-08/08EX
10"	SG-10/10E	SG-10/08E	SG-10/10EX	SG-10/08EX
12"	SG-12/10E	SG-12/08E	SG-12/10EX	SG-12/08EX
14"	SG-12/10E	SG-14/08E	SG-12/10EX	SG-14/08EX
16"		SG-16/08E		SG-16/08EX
18"		SG-18/08E		SG-18/08EX
20"		SG-20/08E		SG-20/08EX

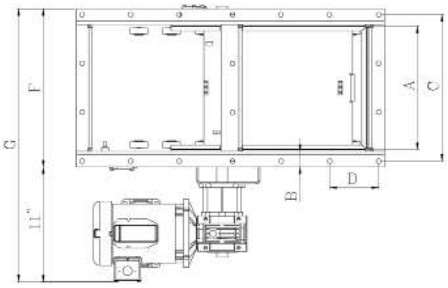

PART #	(A) Nominal Size	B	C	D	F	G	LENGTH
SG-06	6	1-1/4"	7-5/8"	3-13/16	8-5/8	19-5/8	17
SG-08	8	1-1/4"	9-5/8"	4-13/16	10-5/8	21-5/8	21
SG-10	10	1-1/4"	11-5/8"	5-13/16	12-5/8	23-5/8	25
SG-12	12	1-1/2"	14	4-21/32	15-1/8	26-1/8	29-1/2
SG-14	14	1-1/2"	16	4	17-1/8	28-1/8	33-1/2
SG-16	16	1-1/2"	18	4-1/2	19-1/8	30-1/8	37-1/2
SG-18	18	1-1/2"	20	5	21-1/8	32-1/8	41-1/2
SG-20	20	1-1/2"	22	5-1/2	23-1/8	34-1/8	45-1/2
SG-22	22	1-1/2"	24	4	25-1/8	36-1/8	49-1/2
SG-24	24	1-1/2"	26	4-21/64	27-1/8	38-1/8	53-1/2

SLIDE GATE ACCESSORIES

DESCRIPTION	PART #
10" Hand Wheel	SG-WH
10" Chain Wheel	SG-WCH
10" Cable Wheel	SG-WCA
Replacement Gate Wheel	SG-SGW
Dust Seal Kit	SG-DSKU-xx *Replace "xx" with size of gate
Electric Add-On Kit Includes: 1 Motor, 1 Gear Reducer, 2 LImit Switches, 1 Bracket	1-Phase: SG-EAK-1PH 3-Phase: SG-EAK-3PH
Hopper Adapter Plate For Use On Brock, GSI, or Sukup Bins Slotted Holes For Easy Installation Can Only Be Used With 16" Slide Gates	SG-HB1610GG

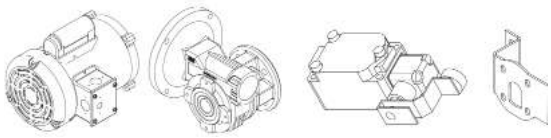

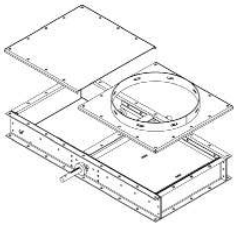

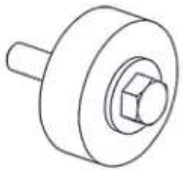

DISTRIBUTOR PIPE ASSEMBLY	
Description	**Part #**
6" 50° Distributor Pipe Assembly	FSA-DST-06PIPE
8" 50° Distributor Pipe Assembly	FSA-DST-08PIPE
10" 50° Distributor Pipe Assembly	FSA-DST-10PIPE
12" 50° Distributor Pipe Assembly	FSA-DST-12PIPE

BRUSH w/ MOUNTING BRACKET TO INNER SPOUT	
Description	**Part #**
6" Brush w/ Mounting Bracket To Inner Spout	FSA-DST-06BRUSH
8" Brush w/ Mounting Bracket To Inner Spout	FSA-DST-08BRUSH
10" Brush w/ Mounting Bracket To Inner Spout	FSA-DST-10BRUSH
12" Brush w/ Mounting Bracket To Inner Spout	FSA-DST-12BRUSH

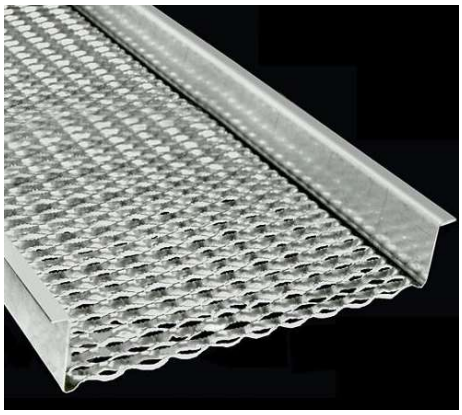

Walkway, GRIP STRUT®
Galvanized Steel, ASTM A-653
G90, 12 Gauge (.1084" Thick),
10-Diamond (24" Width), 4-1/2"
Channel Height, Serrated Surface,
47% Open Area

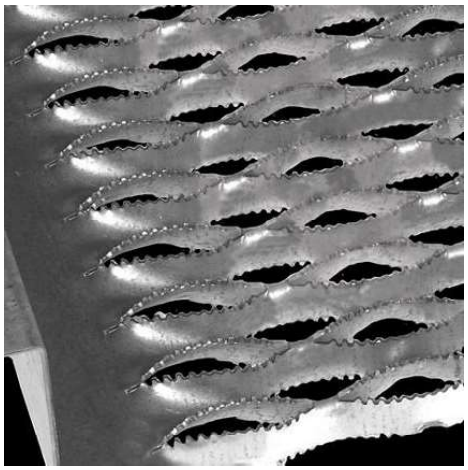

DESCRIPTION	PART #
24" Wide x 120" Long	**Grating-GS-24''x10-12Ga**
24" Wide x 144" Long	**Grating-GS-24''x12-12Ga**

	Galvanized Aircraft Cable Cable-		Stainless Steel Cable Cable-SST-		Thimble	Galv C able Clamp	Stainless Cable Clamp
	PART # per Ft.	PART # per Spool	PART # per Ft.	PRICE per Spool	PART #	PART #	PART #
1/8"	Cable-1/8-ft	Cable-1/8-Spool (1,000')	Cable-SST-1/8-ft	Cable-SST-1/8-Spool (1,000')	Thimb-1/8	CC2	CCSST2
3/16"	Cable-3/16-ft	Cable-3/16-Spool (1,000')	Cable-SST-3/16-ft	Cable-SST-3/16-Spool (1,000')	Thimb-3/16	CC3	CCSST3
1/4"	Cable-1/4-ft	Cable-1/4-Spool (1,000')	Cable-SST-1/4-ft	Cable-SST-1/4-Spool (1,000')	Thimb-1/4	CC5	CCSST5
5/16"	Cable-5/16-ft	Cable-5/16-Spool (1,000')	Cable-SST-5/16-ft	Cable-SST-5/16-Spool (1,000')	Thimb-5/16	CC6	CCSST6
3/8"	Cable-3/8-ft	Cable-3/8-Spool (2,500')	Cable-SST-3/8-ft	Cable-SST-3/8-Spool (1,000')	Thimb-3/8	CC8	CCSST8
1/2"	Cable-1/2-ft	Cable-1/2-Spool (2,500')	Cable-SST-1/2-ft	Cable-SST-1/2-Spool (2,500')	Thimb-1/2	CC10	CCSST10

TRUSS KITS
(Cable, Clamps & Turnbuckles Not Included)

Spout Length: 40' - 60' Use Single Truss Kit
Spout Length: 60' - 80' Use Triple Truss Kit

DESCRIPTION	PART #
6" Single Truss Kit	FSA-TRUSS-SN-06
6" Triple Truss Kit	FSA-TRUSS-TP-06
8" Single Truss Kit	FSA-TRUSS-SN-08
8" Triple Truss Kit	FSA-TRUSS-TP-08
10" Single Truss Kit	FSA-TRUSS-SN-10
10" Triple Truss Kit	FSA-TRUSS-TP-10
12" Single Truss Kit	FSA-TRUSS-SN-12
12" Triple Truss Kit	FSA-TRUSS-TP-12
14" Single Truss Kit	FSA-TRUSS-SN-14

TURNBUCKLES

DESCRIPTION	PART #
3/8" x 18" Turnbuckle (Eye To Jaw)	Turnb-3/8x6-J/E
1/2" x 6" Turnbuckle (Eye To Jaw)	Turnb-1/2x6-J/E
1/2" x 12" Turnbuckle (Eye To Jaw)	Turnb-1/2x12-J/E
5/8" x 12" Turnbuckle (Eye To Jaw)	Turnb-5/8x12-J/E
5/8" x 18" Turnbuckle (Eye To Jaw)	Turnb-5/8x18-J/E
3/4" x 12" Turnbuckle (Eye To Jaw)	Turnb-3/4x12-J/E
3/4" x 18" Turnbuckle (Eye To Jaw)	Turnb-3/4x18-J/E

CABLE HANDLES

SIDE PULLEYS

HOT HOUSE PULLEYS

SINGLE EYE SWIVEL PULLEYS

PART # (sold individually)	PART #	PART #	PART #
CH	SP	HHP	SESP

Elevator & Conveyor Belting

PVC 200 BLACK CBS

Used for elevator belting in the feed and grain industry
Strength: 200 PIW
Thickness: 0.230 in.
Weight: 0.140 lbs. PIW
Minimum Pulley Diameter: 4 in.
Temperature Range: 10°F to 180°F
Maximum Elevator Bucket Projection: 6 in.

PVC 250 BLACK COS

Used in heavy duty feed, grain and bulk product applications
Strength: 230 PIW
Thickness: 0.230 in.
Weight: 0.140 lbs. PIW
Minimum Pulley Diameter: 6 in.
Temperature Range: 10°F to 180°F
Maximum Elevator Bucket Projection: 6 in.

PVC 250 BLACK CBS

Used for elevator belting in the feed and grain industry
Strength: 250 PIW
Thickness: 0.250 in.
Weight: 0.150 lbs. PIW
Minimum Pulley Diameter: 6 in.
Temperature Range: 10°F to 180°F
Maximum Elevator Bucket Projection: 6 in.

PVC 350 BLACK CBS

Used for elevator belting in the feed and grain industry
Strength: 350PIW
Thickness: 0.320 in.
Weight: 0.170 lbs. PIW
Minimum Pulley Diameter: 8 in.
Temperature Range: 10°F to 180°F
Maximum Elevator Bucket Projection: 8 in.

PVC 450 BLACK CBS

Used for elevator belting in the feed and grain industry
Strength: 450PIW
Thickness: 0.350 in.
Weight: 0.180 lbs. PIW
Minimum Pulley Diameter: 10 in.
Temperature Range: 10°F to 180°F
Maximum Elevator Bucket Projection: 9 in.

PVC 600 BLACK CBS

Used for elevator belting in the feed and grain industry
Strength: 600 PIW
Thickness: 0.375 in.
Weight: 0.191 lbs. PIW
Minimum Pulley Diameter: 16 in.
Temperature Range: 20°F to 180°F
Maximum Elevator Bucket Projection: 10 in.

PVC 750 BLACK CBS

Used for elevator belting in the feed and grain industry
Strength: 750 PIW
Thickness: 0.400 in.
Weight: 0.208 lbs. PIW
Minimum Pulley Diameter: 18 in.
Temperature Range: 10°F to 180°F
Maximum Elevator Bucket Projection: 10 in.

2 PLY 220 RUBBER 1/16 x 1/16 SOR-SC-FR

Used for conveyor and elevator belting in the feed and grain industry
Strength: 330 PIW
Thickness: 0.312 in.
Weight: 0.157 lbs. PIW
Minimum Pulley Diameter: 14 in.
Temperature Range: -30°F to 200°F
Maximum Elevator Bucket Projection: 8 in.

3 PLY 330 RUBBER 1/16 x 1/16 SOR-SC-FR

Used for conveyor and elevator belting in the feed and grain industry
Strength: 330 PIW
Thickness: 0.312 in.
Weight: 0.157 lbs. PIW
Minimum Pulley Diameter: 14 in.
Temperature Range: -30°F to 200°F
Maximum Elevator Bucket Projection: 9 in.

2 PLY 400 RUBBER 1/16 x 1/16 SOR-SC-FR

Used for conveyor and elevator belting in the feed and grain industry
Strength: 400 PIW
Thickness: 0.297 in.
Weight: 0.162 lbs. PIW
Minimum Pulley Diameter: 14 in.
Temperature Range: -30°F to 200°F
Maximum Elevator Bucket Projection: 9 in.

4 PLY 440 RUBBER 1/16 x 1/16 SOR-SC-FR

Used for conveyor and elevator belting in the feed and grain industry
Strength: 440 PIW
Thickness: 0.344 in.
Weight: 0.182 lbs. PIW
Minimum Pulley Diameter: 18 in.
Temperature Range: -30°F to 200°F
Maximum Elevator Bucket Projection: 10 in.

Abbreviation Key:

CBS = Cover Both Sides
COS = Cover One Side
EPDM = Ethylene Propylene Diene Terpolymer
SOR-SC-FR = Super Oil Resistant, Static Conductive & Fire Retardant

Elevator & Conveyor Belting

3 PLY 600 RUBBER 1/16 x 1/16 SOR-SC-FR

Used for conveyor and elevator belting in the grain and agricultural industry
Strength: 600PIW
Thickness: 0.344 in.
Weight: 0.172 lbs. PIW
Minimum Pulley Diameter: 18 in.
Temperature Range: -30°F to 200°F
Maximum Elevator Bucket Projection: 10 in.

4 PLY 800 RUBBER 1/16 x 1/16 SOR-SC-FR

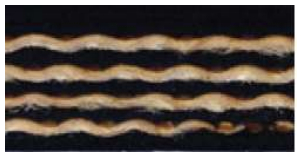

Used for conveyor and elevator belting in the feed and grain industry
Strength: 800 PIW
Thickness: 0.406 in.
Weight: 0.207 lbs. PIW
Minimum Pulley Diameter: 24 in.
Temperature Range: -30°F to 200°F
Maximum Elevator Bucket Projection: 11 in.

BELTING	PART #
8" 220# Rubber Belting	RB2208
9" 220# 2-Ply SOR Elevator Belt (6" Spacing)	RB2209
10" 220# Rubber Belting-SOR-FR-SC F/ 9" x 5" Buckets (3-Hole, 3-5/8" Centers) on 6" Spacing	RB22010
10" 220# Rubber Belting-SOR-FR-SC F/ 9" x 6" Buckets (3-Hole, 3-5/8" Centers) on 7" Spacing	RB33010
10" 220# Oil & Heat Resistant Belt w/ 7In.Bucket Spacing(350deg.Max)	RB220H10
11" 220# Rubber Belting (Cut To 10.75" Wide & Punched @ 8" Centers)	RB22011
12" 330# Rubbber Belting-SOR-FR-SC F/ 11" x 7" Buckets (4-Hole, 3" Centers) on 8" Spacing	RB33012
13" 330# 3-Ply Rubber Belting w/ 10" Spacing	RB33013
14" 330# Rubber Belting w/ 4-Bolt Punching On 7" Spacing F/ 13x6 Cups	RB33014
15" x 330# Rubber Belting (8" Centers)	RB33015
20" 330# Rubber Belting F/ 9" x 5" Buckets On 6" Spacing (Double Offset Rows)	RB33020
20" 4-Ply 440# Rubber Belting (Punched F/ 18x8 On 8.5"Ctrs)	RB44020

Vise Splice Elevator Belt Splice & Fastener

Each Piece is made of three pieces. The outside plates have two different gripping areas. The ribbed gripping area is mounting towards the face belt. The opposite end has a series of both longitudinal and axial "teeth". The center plate is symmetrical and cannot be improperly installed aro elongated center hole.

FEATURES

- Mechanical clamping device with a simple 3-piece construction
- Used on PVC and rubber belting
- Designed in 2" segments
- 4-1/2" long bolts for belts between 1/4" and 1/2" thick
- 5" long bolts for belts between 1/2" and 3/4" thick
- Maximum operating temps*: Non-Ferrous 500°F, Ferrous 600°F

* All metal lock nuts required

DESCRIPTION	PART
Maxi-Splice, Non-Sparking 9/16" x 4-1/2" Hex Bolt & Nut	MAXISPLICE-4.5
Maxi-Splice, Non-Sparking 9/16" x 5" Hex Bolt & Nut	MAXISPLICE-5

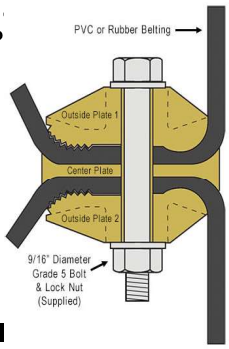

Slide-Lag Pulley Lagging

Lagging Strips Are 5-1/2" Wide and Come In 6' Lengths and Are Pre-Formed To Match The Pulley Diameter
~ Retainer Clips Are 6' Long ~

PULLEY DIAMETER	PART #
9"	785-03090
12"	785-03120
16"	785-03160
24"	785-03240
30"	785-03300
36"	785-03600
42"	785-03420
48"	785-03480

Retainer (Single)	CLT11
Retainer (Double)	CLT10

CC-S® Heavy Duty Agricultural Buckets

MADE IN THE USA

A range of heavy-duty CC style elevator buckets designed to outperform other agricultural buckets by offering greater capacities, longer life, and cleaner discharges. Unique Iceberg® Edge design with stronger front lip and maximum material thickness. With the CC-S® series stackable design, there is the added benefit of substantial freight and storage space savings. The complete CC-S® range of 35 different sizes are molded from premium virgin white HDPE (nylon and urethane available) for ultimate strength and durability.

Material Virgin HDPE, nylon or urethane

Temp. Range
HDPE: 120 °F to 180 °F
Nylon: -60 °F to 300 °F
Urethane: -60 °F to 180 °F

Features
- Light weight, tough and flexible
- Reinforced front lip, walls and corners
- Stackable design for shipping and storage
- Wingless profile for closer spacing & greater capacities

Applications Non-abrasive free-flowing granular materials such as grain, feed, seed, food products and fertilizer.

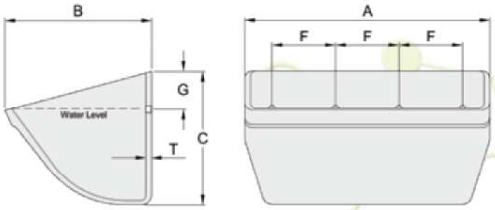

U.S. Patent D496-052

		Dimensions (in.)				Standard Punching (in.)				Capacity (cu. in.)			
Nominal Size (in.)	Part #	Length A	Projection B	Back Depth C	Thickness T	# Holes	Bolt Size	Hole Center F	Dist. Down G	Water Level	Water Level +10%	Minimum Spacing	HDPE Weight (lbs)
3 x 2	CC-S032	3-5/16	2-1/2	2-1/16	3/16	2	1/4	1-3/4	7/8	6	7	2-1/2	0.20
4 x 3	CC-S043	4-5/16	3-1/2	3-1/16	3/16	2	1/4	2-1/2	7/8	17	19	3-1/2	0.25
5 x 4	CC-S054	5-1/4	4-1/2	4-1/16	1/4	2	1/4	3-3/16	1-1/4	37	41	4-1/2	0.45
6 x 4	CC-S064	6-1/4	4-1/2	4-1/16	1/4	2	1/4	4-3/8	1-1/4	45	50	4-1/2	0.52
7 x 4	CC-S074	7-1/4	4-1/2	4-1/16	1/4	3	1/4	2-11/16	1-1/4	53	58	4-1/2	0.58
6 x 5	CC-S065	6-3/8	5-1/2	5-5/32	1/4	2	1/4	4-3/8	1-7/8	70	77	5-1/2	0.82
7 x 5	CC-S075	7-3/8	5-1/2	5-5/32	1/4	3	1/4	2-11/16	1-7/8	83	91	5-1/2	0.91
8 x 5	CC-S085	8-3/8	5-1/2	5-5/32	1/4	3	1/4	3-1/16	1-7/8	95	105	5-1/2	0.99
9 x 5	CC-S095	9-3/8	5-1/2	5-5/32	1/4	3	1/4	3-5/8	1-7/8	107	118	5-1/2	1.10
10 x 5	CC-S105	10-3/8	5-1/2	5-5/32	1/4	3	1/4	4-1/8	1-7/8	120	132	5-1/2	1.20
11 x 5	CC-S115	11-3/8	5-1/2	5-5/32	1/4	4	1/4	3	1-7/8	132	145	5-1/2	1.30
12 x 5	CC-S125	12-3/8	5-1/2	5-5/32	1/4	4	1/4	3-3/8	1-7/8	145	160	5-1/2	1.37
8 x 6	CC-S086	8-3/8	6-5/8	6-1/16	9/32	3	1/4	3-1/16	2	136	150	6-1/2	1.24
9 x 6	CC-S096	9-3/8	6-5/8	6-1/16	9/32	3	1/4	3-5/8	2	154	169	6-1/2	1.37
10 x 6	CC-S106	10-3/8	6-5/8	6-1/16	9/32	3	1/4	4-1/8	2	172	190	6-1/2	1.50
11 x 6	CC-S116	11-3/8	6-5/8	6-1/16	9/32	4	1/4	3	2	190	209	6-1/2	1.58
12 x 6	CC-S126	12-3/8	6-5/8	6-1/16	9/32	4	1/4	3-3/8	2	209	230	6-1/2	1.72
13 x 6	CC-S136	13-3/8	6-5/8	6-1/16	9/32	4	1/4	3-5/8	2	227	250	6-1/2	1.85
14 x 6	CC-S146	14-3/8	6-5/8	6-1/16	9/32	5	1/4	3	2	240	264	6-1/2	1.96
10 x 7	CC-S107	10-3/4	7-7/8	7-1/16	5/16	3	5/16	4-1/8	2	241	266	7-1/2	2.30
11 x 7	CC-S117	11-3/4	7-7/8	7-1/16	5/16	4	5/16	3	2	267	293	7-1/2	2.43
12 x 7	CC-S127	12-3/4	7-7/8	7-1/16	5/16	4	5/16	3-3/8	2	292	321	7-1/2	2.65
13 x 7	CC-S137	13-3/4	7-7/8	7-1/16	5/16	4	5/16	3-5/8	2	317	349	7-1/2	2.82
14 x 7	CC-S147	14-3/4	7-7/8	7-1/16	5/16	5	5/16	3	2	343	377	7-1/2	3.02
15 x 7	CC-S157	15-3/4	7-7/8	7-1/16	5/16	5	5/16	3-1/4	2	368	405	7-1/2	3.20
16 x 7	CC-S167	16-3/4	7-7/8	7-1/16	5/16	6	5/16	2-7/8	2	393	432	7-1/2	3.37
10 x 8	CC-S108	10-13/16	8-15/16	8-1/4	13/32	3	5/16	4-1/8	2-3/8	316	348	8-1/2	3.17
11 x 8	CC-S118	11-13/16	8-15/16	8-1/4	13/32	4	5/16	3	2-3/8	349	384	8-1/2	3.42
12 x 8	CC-S128	12-13/16	8-15/16	8-1/4	13/32	4	5/16	3-3/8	2-3/8	384	422	8-1/2	3.65
13 x 8	CC-S138	13-13/16	8-15/16	8-1/4	13/32	4	5/16	3-5/8	2-3/8	417	459	8-1/2	3.88
14 x 8	CC-S148	14-13/16	8-15/16	8-1/4	13/32	5	5/16	3	2-3/8	451	496	8-1/2	4.15
15 x 8	CC-S158	15-13/16	8-15/16	8-1/4	13/32	5	5/16	3-1/4	2-3/8	484	533	8-1/2	4.35
16 x 8	CC-S168	16-13/16	8-15/16	8-1/4	13/32	6	5/16	2-7/8	2-3/8	517	569	8-1/2	4.52
18 x 8	CC-S188	18-13/16	8-15/16	8-1/4	13/32	6	5/16	3-1/8	2-3/8	586	645	8-1/2	5.07
20 x 8	CC-S208	20-13/16	8-15/16	8-1/4	13/32	6	5/16	3-1/2	2-3/8	652	718	8-1/2	5.51

- HDPE information listed in chart above, actual dimensions may vary slightly depending on specified raw material

CC-S® Heavy Duty Agricultural Buckets

Nominal Size (in.)	STANDARD SIZE			LOW-PROFILE		
	No Venting	Vent 1 (add /V1 to Part #)	Vent 2 (add /V2 to Part #)	No Venting (add /LP to Part #)	Vent 1 (add /LP/V1 to Part #)	Vent 2 (add /LP/V2 to Part #)
	Part #	Part #	Part #	Part #	Part #	Part #
3 x 2	CC-S032	CC-S032/V1	CC-S032/V2	CC-S032/LP	CC-S032/LP/V1	CC-S032/LP/V2
4 x 3	CC-S043	CC-S043/V1	CC-S043/V2	CC-S043/LP	CC-S043/LP/V1	CC-S043/LP/V2
5 x 4	CC-S054	CC-S054/V1	CC-S054/V2	CC-S054/LP	CC-S054/LP/V1	CC-S054/LP/V2
6 x 4	CC-S064	CC-S064/V1	CC-S064/V2	CC-S064/LP	CC-S064/LP/V1	CC-S064/LP/V2

Nominal Size (in.)	STANDARD SIZE				LOW-PROFILE			
	No Venting	Vent 1 (add /V1 to Part #)	Vent 2 (add /V2 to Part #)	Vent 3 (add /V3 to Part #)	No Venting (add /LP to Part #)	Vent 1 (add /LP/V1 to Part #)	Vent 2 (add /LP/V2 to Part #)	Vent 3 (add /V3 to Part #)
	Part #	Part #	Part #	Part #	Part #	Part #	Part #	Part #
7 x 4	CC-S074	CC-S074/V1	CC-S074/V2	CC-S074/V3	CC-S074/LP	CC-S074/LP/V1	CC-S074/LP/V2	CC-S074/LP/V3
6 x 5	CC-S065	CC-S065/V1	CC-S065/V2	CC-S065/V3	CC-S065/LP	CC-S065/LP/V1	CC-S065/LP/V2	CC-S065/LP/V3
7 x 5	CC-S075	CC-S075/V1	CC-S075/V2	CC-S075/V3	CC-S075/LP	CC-S075/LP/V1	CC-S075/LP/V2	CC-S075/LP/V3
8 x 5	CC-S085	CC-S085/V1	CC-S085/V2	CC-S085/V3	CC-S085/LP	CC-S085/LP/V1	CC-S085/LP/V2	CC-S085/LP/V3

Nominal Size (in.)	STANDARD SIZE					LOW-PROFILE				
	No Venting	Vent 1 (add /V1 to Part #)	Vent 2 (add /V2 to Part #)	Vent 3 (add /V3 to Part #)	Vent 4 (add /V4 to Part #)	No Venting (add /LP to Part #)	Vent 1 (add /LP/V1 to Part #)	Vent 2 (add /LP/V2 to Part #)	Vent 3 (add /V3 to Part #)	Vent 4 (add /V4 to Part #)
	Part #	Part #	Part #	Part #	Part #	Part #	Part #	Part #	Part #	Part #
9 x 5	CC-S095	CC-S095/V1	CC-S095/V2	CC-S095/V3	CC-S095/V4	CC-S095/LP	CC-S095/LP/V1	CC-S095/LP/V2	CC-S095/LP/V3	CC-S095/LP/V4
10 x 5	CC-S105	CC-S105/V1	CC-S105/V2	CC-S105/V3	CC-S105/V4	CC-S105/LP	CC-S105/LP/V1	CC-S105/LP/V2	CC-S105/LP/V3	CC-S105/LP/V4
11 x 5	CC-S115	CC-S115/V1	CC-S115/V2	CC-S115/V3	CC-S115/V4	CC-S115/LP	CC-S115/LP/V1	CC-S115/LP/V2	CC-S115/LP/V3	CC-S115/LP/V4
12 x 5	CC-S125	CC-S125/V1	CC-S125/V2	CC-S125/V3	CC-S125/V4	CC-S125/LP	CC-S125/LP/V1	CC-S125/LP/V2	CC-S125/LP/V3	CC-S125/LP/V4
8 x 6	CC-S086	CC-S086/V1	CC-S086/V2	CC-S086/V3	CC-S086/V4	CC-S086/LP	CC-S086/LP/V1	CC-S086/LP/V2	CC-S086/LP/V3	CC-S086/LP/V4
9 x 6	CC-S096	CC-S096/V1	CC-S096/V2	CC-S096/V3	CC-S096/V4	CC-S096/LP	CC-S096/LP/V1	CC-S096/LP/V2	CC-S096/LP/V3	CC-S096/LP/V4
10 x 6	CC-S106	CC-S106/V1	CC-S106/V2	CC-S106/V3	CC-S106/V4	CC-S106/LP	CC-S106/LP/V1	CC-S106/LP/V2	CC-S106/LP/V3	CC-S106/LP/V4
11 x 6	CC-S116	CC-S116/V1	CC-S116/V2	CC-S116/V3	CC-S116/V4	CC-S116/LP	CC-S116/LP/V1	CC-S116/LP/V2	CC-S116/LP/V3	CC-S116/LP/V4
12 x 6	CC-S126	CC-S126/V1	CC-S126/V2	CC-S126/V3	CC-S126/V4	CC-S126/LP	CC-S126/LP/V1	CC-S126/LP/V2	CC-S126/LP/V3	CC-S126/LP/V4
13 x 6	CC-S136	CC-S136/V1	CC-S136/V2	CC-S136/V3	CC-S136/V4	CC-S136/LP	CC-S136/LP/V1	CC-S136/LP/V2	CC-S136/LP/V3	CC-S136/LP/V4
14 x 6	CC-S146	CC-S146/V1	CC-S146/V2	CC-S146/V3	CC-S146/V4	CC-S146/LP	CC-S146/LP/V1	CC-S146/LP/V2	CC-S146/LP/V3	CC-S146/LP/V4
10 x 7	CC-S107	CC-S107/V1	CC-S107/V2	CC-S107/V3	CC-S107/V4	CC-S107/LP	CC-S107/LP/V1	CC-S107/LP/V2	CC-S107/LP/V3	CC-S107/LP/V4
11 x 7	CC-S117	CC-S117/V1	CC-S117/V2	CC-S117/V3	CC-S117/V4	CC-S117/LP	CC-S117/LP/V1	CC-S117/LP/V2	CC-S117/LP/V3	CC-S117/LP/V4
12 x 7	CC-S127	CC-S127/V1	CC-S127/V2	CC-S127/V3	CC-S127/V4	CC-S127/LP	CC-S127/LP/V1	CC-S127/LP/V2	CC-S127/LP/V3	CC-S127/LP/V4
13 x 7	CC-S137	CC-S137/V1	CC-S137/V2	CC-S137/V3	CC-S137/V4	CC-S137/LP	CC-S137/LP/V1	CC-S137/LP/V2	CC-S137/LP/V3	CC-S137/LP/V4
14 x 7	CC-S147	CC-S147/V1	CC-S147/V2	CC-S147/V3	CC-S147/V4	CC-S147/LP	CC-S147/LP/V1	CC-S147/LP/V2	CC-S147/LP/V3	CC-S147/LP/V4
15 x 7	CC-S157	CC-S157/V1	CC-S157/V2	CC-S157/V3	CC-S157/V4	CC-S157/LP	CC-S157/LP/V1	CC-S157/LP/V2	CC-S157/LP/V3	CC-S157/LP/V4
16 x 7	CC-S167	CC-S167/V1	CC-S167/V2	CC-S167/V3	CC-S167/V4	CC-S167/LP	CC-S167/LP/V1	CC-S167/LP/V2	CC-S167/LP/V3	CC-S167/LP/V4
10 x 8	CC-S108	CC-S108/V1	CC-S108/V2	CC-S108/V3	CC-S108/V4	CC-S108/LP	CC-S108/LP/V1	CC-S108/LP/V2	CC-S108/LP/V3	CC-S108/LP/V4
11 x 8	CC-S118	CC-S118/V1	CC-S118/V2	CC-S118/V3	CC-S118/V4	CC-S118/LP	CC-S118/LP/V1	CC-S118/LP/V2	CC-S118/LP/V3	CC-S118/LP/V4
12 x 8	CC-S128	CC-S128/V1	CC-S128/V2	CC-S128/V3	CC-S128/V4	CC-S128/LP	CC-S128/LP/V1	CC-S128/LP/V2	CC-S128/LP/V3	CC-S128/LP/V4
13 x 8	CC-S138	CC-S138/V1	CC-S138/V2	CC-S138/V3	CC-S138/V4	CC-S138/LP	CC-S138/LP/V1	CC-S138/LP/V2	CC-S138/LP/V3	CC-S138/LP/V4
14 x 8	CC-S148	CC-S148/V1	CC-S148/V2	CC-S148/V3	CC-S148/V4	CC-S148/LP	CC-S148/LP/V1	CC-S148/LP/V2	CC-S148/LP/V3	CC-S148/LP/V4
15 x 8	CC-S158	CC-S158/V1	CC-S158/V2	CC-S158/V3	CC-S158/V4	CC-S158/LP	CC-S158/LP/V1	CC-S158/LP/V2	CC-S158/LP/V3	CC-S158/LP/V4
16 x 8	CC-S168	CC-S168/V1	CC-S168/V2	CC-S168/V3	CC-S168/V4	CC-S168/LP	CC-S168/LP/V1	CC-S168/LP/V2	CC-S168/LP/V3	CC-S168/LP/V4
18 x 8	CC-S188	CC-S188/V1	CC-S188/V2	CC-S188/V3	CC-S188/V4	CC-S188/LP	CC-S188/LP/V1	CC-S188/LP/V2	CC-S188/LP/V3	CC-S188/LP/V4
20 x 8	CC-S208	CC-S208/V1	CC-S208/V2	CC-S208/V3	CC-S208/V4	CC-S208/LP	CC-S208/LP/V1	CC-S208/LP/V2	CC-S208/LP/V3	CC-S208/LP/V4

Fabricated Steel Digger Buckets

- Available in wingless or traditional CC styles

MADE IN THE USA

Digger elevator buckets are used in conjunction with plastic buckets to help break up material that can harden in the boot section of a bucket elevator.

Made from extra heavy duty steel with a reinforced front lip, digger buckets extend 1/4" further than plastic buckets to provide the proper digging action to loosen hardened material.

All Digger Buckets Are Quoted and Built To Order

Consult AN Martin Systems to ensure no clearance issues occur when using digger buckets in your elevator

Features

- Thick reinforced lip for superior abrasion resistance and strength
- Resistant to distortion from scooping heavy or packed materials (sand, glass, gravel, etc.)
- Mounted on chain or belt
- Options: carbon steel, stainless steel, AR plate, wear lips and hard weld

		Dimensions (in.)				Standard Punching (in.)				Capacity (cu. in.)			
Nominal Size (in.)	Part #	Length A	Projection B	Back Depth C	Standard Gauge	# Holes	Bolt Size	Hole Center F	Dist. Down G	Water Level	Water Level +10%	Minimum Spacing	Approx. Weight (lbs)
4 x 3	DB-4 x 3	4-1/2	3-3/4	3-1/16	12	2	1/4	2-1/2	7/8	17	19	3-1/2	2.25
5 x 4	DB-5 x 4	5-1/2	4-3/4	4-1/16	12	2	1/4	3-3/16	7/8	37	41	4-1/2	2.50
6 x 4	DB-6 x 4	6-1/2	4-3/4	4-1/16	12	2	1/4	4-3/8	1-1/4	45	50	4-1/2	3.40
7 x 4	DB-7 x 4	7-1/2	4-3/4	4-1/16	12	3	1/4	2-11/16	1-1/4	53	58	4-1/2	3.25
6 x 5	DB-6 x 5	6-5/8	5-3/4	5-3/16	10	2	1/4	4-3/8	1-1/4	70	77	5-1/2	4.75
7 x 5	DB-7 x 5	7-5/8	5-3/4	5-3/16	10	3	1/4	2-11/16	1-1/4	83	91	5-1/2	5.20
8 x 5	DB-8 x 5	8-5/8	5-3/4	5-3/16	10	3	1/4	3-1/16	1-1/4	95	105	5-1/2	5.60
9 x 5	DB-9 x 5	9-5/8	5-3/4	5-3/16	10	3	1/4	3-5/8	1-1/4	107	118	5-1/2	6.25
10 x 5	DB-10 x 5	10-5/8	5-3/4	5-3/16	10	3	1/4	4-1/8	1-1/4	120	132	5-1/2	6.75
11 x 5	DB-11 x 5	11-5/8	5-3/4	5-3/16	10	4	1/4	3	1-1/4	132	145	5-1/2	7.30
12 x 5	DB-12 x 5	12-5/8	5-3/4	5-3/16	10	4	1/4	3-3/8	1-1/4	145	160	5-1/2	8.40
8 x 6	DB-8 x 6	8-5/8	6-7/8	6-1/16	10	3	1/4	3-1/16	1-7/8	136	150	6-1/2	7.75
9 x 6	DB-9 x 6	9-5/8	6-7/8	6-1/16	10	3	1/4	3-5/8	1-7/8	154	169	6-1/2	8.25
10 x 6	DB-10 x 6	10-5/8	6-7/8	6-1/16	10	3	1/4	4-1/8	1-7/8	172	190	6-1/2	8.90
11 x 6	DB-11 x 6	11-5/8	6-7/8	6-1/16	10	4	1/4	3	1-7/8	190	209	6-1/2	9.35
12 x 6	DB-12 x 6	12-5/8	6-7/8	6-1/16	10	4	1/4	3-3/8	1-7/8	209	230	6-1/2	9.75
13 x 6	DB-13 x 6	13-5/8	6-7/8	6-1/16	10	4	1/4	3-5/8	1-7/8	227	250	6-1/2	10.25
14 x 6	DB-14 x 6	14-5/8	6-7/8	6-1/16	10	4	1/4	3	1-7/8	240	264	6-1/2	10.60
10 x 7	DB-10 x 7	11	8-1/16	7-1/16	10	3	5/16	4-1/8	2	241	266	7-1/2	10.45
11 x 7	DB-11 x 7	12	8-1/16	7-1/16	10	4	5/16	3	2	267	293	7-1/2	11.30
12 x 7	DB-12 x 7	13	8-1/16	7-1/16	10	4	5/16	3-3/8	2	292	321	7-1/2	11.90
13 x 7	DB-13 x 7	14	8-1/16	7-1/16	10	4	5/16	3-5/8	2	317	349	7-1/2	12.25
14 x 7	DB-14 x 7	15	8-1/16	7-1/16	10	5	5/16	3	2	343	377	7-1/2	12.90
15 x 7	DB-15 x 7	16	8-1/16	7-1/16	10	5	5/16	3-1/4	2	368	405	7-1/2	15.45
16 x 7	DB-16 x 7	17	8-1/16	7-1/16	10	6	5/16	2-7/8	2	393	432	7-1/2	16.25
10 x 8	DB-10 x 8	11	9-1/16	8-1/4	10	3	5/16	4-1/8	2-3/8	316	348	8-1/2	12.50
11 x 8	DB-11 x 8	12	9-1/16	8-1/4	10	4	5/16	3	2-3/8	349	384	8-1/2	13.75
12 x 8	DB-12 x 8	13	9-1/16	8-1/4	10	4	5/16	3-3/8	2-3/8	384	422	8-1/2	14.60
13 x 8	DB-13 x 8	14	9-1/16	8-1/4	10	4	5/16	3-5/8	2-3/8	417	459	8-1/2	15.25
14 x 8	DB-14 x 8	15	9-1/16	8-1/4	10	5	5/16	3	2-3/8	451	496	8-1/2	15.80
15 x 8	DB-15 x 8	16	9-1/16	8-1/4	10	5	5/16	3-1/4	2-3/8	484	533	8-1/2	16.30
16 x 8	DB-16 x 8	17	9-1/16	8-1/4	10	6	5/16	2-7/8	2-3/8	517	569	8-1/2	17.10
18 x 8	DB-18 x 8	19	9-1/16	8-1/4	10	6	5/16	3-1/8	2-3/8	586	645	8-1/2	19.80
20 x 8	DB-20 x 8	21	9-1/16	8-1/4	10	6	5/16	3-1/2	2-3/8	652	718	8-1/2	23.45

- Digger buckets typically installed using 1 to 10 ratio, contact AN Martin Systems for more information

1/4" HARDWARE (packages of 100)

Description	Part #	Part #
Hex Nut	NC01	NC01/304S
Lock Washer	LW01	LW01/304S
Fender Washer	FW01	FW01/304S
Flat Washer	W01	
Leather Washer	LEW01	
Poly Spacer	PS01	
Poly Spacer, 1/4" thick	PS01-1/4	
Neoprene Washer	NW01	
Wiz Nut	WN01	
Nylock Nut (course thread)	NYC01	NYC01/304S
Nylock Nut (fine thread)	NYF01	NF01/304S
Hex Nut (heavy)	NCH01	
Hex Nut (fine)	NF01	

5/16" HARDWARE (packages of 100)

Description	Part #	Part #
Hex Nut	NC02	NC02/304S
Lock Washer	LW02	
Fender Washer	FW02	FW02/304S
Flat Washer	W02	W02/304S
Leather Washer	LEW02	
Poly Spacer. 1/2" thick	PS02	
Nylon Spacer, 1/2"	NS02	
Neoprene Washer	NW02	
Wiz Nut	WN02	
Nylock Nut (course thread)	NYC02	NYC02/304S
Nylock Nut (fine thread)	NYF02	NYF02/304S
Hex Nut (heavy)	NCH02	
Hex Nut (fine)	NF02	

3/8" HARDWARE (packages of 100)

Description	Part #	Part #
Hex Nut	NC03	NC03/304S
Lock Washer	LW03	LW03/304S
Fender Washer	FW03	FW03/304S
Flat Washer	W03	W03/304S
Leather Washer	LEW03	
Neoprene Washer	NW03	
Wiz Nut	WN03	WN03/304S
Nylock Nut (course thread)	NYC03	NYC03/304S
Nylock Nut (fine thread)	NYF03	NYF03/304S

Nuts, Washers & Spacers

Hex Nut

Flat Washer

Nylon Insert Lock Nut (Nylock)

Split Ring Lock Washer

All Metal Lock Nut

Neoprene Washer

Serrated Hex Flange Nut (Whiz Nut)

Leather Washer

HDPE Spacers

Fender Washer

Dome Washer

Bolts, Nuts, Washers & Spacers Packaged in Quantities of 100

#1 Norway elevator bolts are the most common style used in the U.S. grain industry. The square shoulder under the flat head of the Norway bolt helps prevent spinning during installation (square peg in a round hole principle). 4B #1 Norway bolts meet or exceed Grade 2 standards for load, yield and tensile strength.

4B #1 Norway Elevator Bolts

Material

Zinc plated steel or
Stainless steel (302)

Features

- Most common style in the U.S. grain industry
- Square shoulder design resists spinning
- Large bolt head diameter resists belt pull through
- Suitable for recessed and flat back elevator bucket holes
- Meets or exceeds industry standards for Grade 2 bolts

	ZINC PLATED	STAINLESS STEEL			
Size (in.)	Part # (100 ct.)	Part # (100ct.)	Head Diameter	Squared Shoulder Height	Max. Torque
1/4 x 1	NWY-1/4X1	NWY-1/4X1-302S	1	7/32	6
1/4 x 1-1/4	NWY-1/4X1.1/4	NWY-1/4X1.1/4-302S	1	7/32	6
1/4 x 1-1/2	NWY-1/4X1.1/2	NWY-1/4X1.1/2-302S	1	7/32	6
1/4 x 1-3/4	NWY-1/4x1.3/4	NWY-1/4x1.3/4-302S	1	7/32	6
1/4 x 2	NWY-1/4X2	NWY-1/4X2-302S	1	7/32	6
5/16 x 1	NWY-5/16X1	NWY-5/16X1-302S	1-3/16	1/4	13
5/16 x 1-1/4	NWY-5/16X1.1/4	NWY-5/16X1.1/4-302S	1-3/16	1/4	13
5/16 x 1-1/2	NWY-5/16X1.1/2	NWY-5/16X1.1/2-302S	1-3/16	1/4	13
5/16 x 1-3/4	NWY-5/16X1.3/4	NWY-5/16X1.3/4-302S	1-3/16	1/4	13
5/16 x 2	NWY-5/16X2	NWY-5/16X2-302S	1-3/16	1/4	13
5/16 x 2-1/4	NWY-5/16X2.1/4	NWY-5/16X2.1/4-302S	1-3/16	1/4	13
5/16 x 2-1/2	NWY-5/16X2.1/2	NWY-5/16X2.1/2-302S	1-3/16	1/4	13
3/8 x 1	NWY-3/8X1	NWY-3/8X1-302S	1-1/4	1/4	23
3/8 x 1-1/4	NWY-3/8X1.1/4	NWY-3/8X1.1/4-302S	1-1/4	1/4	23
3/8 x 1-1/2	NWY-3/8X1.1/2	NWY-3/8X1.1/2-302S	1-1/4	1/4	23
3/8 x 1-3/4	NWY-3/8X1.3/4	NWY-3/8X1.3/4-302S	1-1/4	1/4	23
3/8 x 2	NWY-3/8X2	NWY-3/8X2-302S	1-1/4	1/4	23
3/8 x 2-1/2	NWY-3/8x2.1/2	NWY-3/8x2.1/2-302S	1-1/4	1/4	23

- Non-stocking size - special order
- Nylon insert lock nuts not recommended for #1 Norway bolts
- Installed bolt torque rating dependent on bucket belt size

Plastic Buckets:

- Hex Nut
- Split Ring Lock Washer
- Fender Washer
- Bucket
- Belt
- Bolt

Metal Buckets:

- Hex Nut
- Split Ring Lock Washer
- Flat Washer
- Bucket
- Belt
- Bolt

The fanged elevator bolt is characterized by two sharp teeth that are intended to penetrate the carcass of the elevator belt. Once the teeth penetrate the belt, they help keep the bolt from spinning which easily allows the lock nut to be tightened.

4B Fanged Elevator Bolts

Material

Zinc plated steel or
Stainless steel (302)

Features

- Unique design - fangs lock bolt in place as nut is tightened
- Large bolt head diameter resists belt pull though
- Extensively tested and used in U.S. grain industry
- For recessed and flat back elevator bucket holes
- Meets or exceeds industry standards for Grade 2 bolts

	ZINC PLATED	STAINLESS				
Size (in.)	Part # (100 ct.)	Part # (100 ct.)	Head Diameter	Fang Height	Squared Shoulder Height	Max. Torque
1/4 x 3/4	FANG-1/4X3/4	FANG-1/4X3/4-302S	1	3/16	7/32	6
1/4 x 1	FANG-1/4X1	FANG-1/4X1-302S	1	3/16	7/32	6
1/4 x 1-1/4	FANG-1/4X1.1/4	FANG-1/4X1.1/4-302S	1	3/16	7/32	6
1/4 x 1-1/2	FANG-1/4X1.1/2	FANG-1/4X1.1/2-302S	1	3/16	7/32	6
1/4 x 2	FANG-1/4X2	FANG-1/4X2-302S	1	3/16	7/32	6
5/16 x 1	FANG-5/16X1	FANG-5/16X1-302S	1-3/16	1/4	1/4	13
5/16 x 1-1/4	FANG-5/16X1.1/4	FANG-5/16X1.1/4-302S	1-3/16	1/4	1/4	13
5/16 x 1-1/2	FANG-5/16X1.1/2	FANG-5/16X1.1/2-302S	1-3/16	1/4	1/4	13
5/16 x 1-3/4	FANG-5/16X1.3/4	FANG-5/16X1.3/4-302S	1-3/16	1/4	1/4	13
5/16 x 2	FANG-5/16X2	FANG-5/16X2-302S	1-3/16	1/4	1/4	13
5/16 x 2-1/4	FANG-5/16X2.1/4	FANG-5/16X2.1/4-302S	1-3/16	1/4	1/4	13
5/16 x 2-1/2	FANG-5/16X2.1/2	FANG-5/16X2.1/2-302S	1-3/16	1/4	1/4	13
3/8 x 1-1/4	FANG-3/8X1.1/4	FANG-3/8X1.1/4-302S	1-1/4	9/32	1/4	23
3/8 x 1-1/2	FANG-3/8X1.1/2	FANG-3/8X1.1/2-302S	1-1/4	9/32	1/4	23
3/8 x 1-3/4	FANG-3/8X1.3/4	FANG-3/8X1.3/4-302S	1-1/4	9/32	1/4	23
3/8 x 2	FANG-3/8X2	FANG-3/8X2-302S	1-1/4	9/32	1/4	23

- Installed bolt torque rating dependent on bucket belt size

Do *not* use fanged bolts on PVC 250 or lighter belting

Metal Buckets:
- Nylon Insert Lock Nut
- Flat Washer
- Bucket
- Belt
- Bolt

Metal Buckets:
- Hex Nut
- Split Ring Lock Washer
- Flat Washer
- Bucket
- Belt
- Bolt

Plastic Buckets:
- Nylon Insert Lock Nut
- Fender Washer
- Bucket
- Belt
- Bolt

Plastic Buckets:
- Hex Nut
- Split Ring Lock Washer
- Fender Washer
- Bucket
- Belt
- Bolt

7 - AUGERS

Bulk Tank & Utility Augers	2-3
Auger Accessories	4
Shafts, Hangers & Bushings	5
U-Troughs & Accessories	6-8
Replacement Screws & Flighting	9-12
Portable Augers	13-21
Auger Powerheads	22-28
Powersweep Parts	29-37

AGI WESTFIELD

4" Utility Augers

INCLUDES:
- 16 Gauge Tubing, Painted
- 13 Gauge Flighting
- 8" 1-Belt (A) Pulley
- (1) A33 Belt
- Motor Mount
- Belt Guard
- Spider Cage

Motor & Pulley NOT Included
2" - 2-1/4" Recommended

ITEM #	DESCRIPTION	Rec. HP
02-UB0411HM	4" x 11' Utility Auger	1/2hp
02-UX0405	4" x 5' Extension	
02-UX0410	4" x 10' Extension	
05-A145	4" Adjustable Feed Control	
05-A146	4" Swivel Mount Bracket	
05-A152	4" Metal Intake Hopper	
05-A210	4" Poly Hopper	

6" Utility Augers

INCLUDES:
- 16 Gauge Tubing, Painted
- 12 Gauge Flighting
- 12.7" 2-Belt Pulley
- (2) B48 Belts
- Motor Mount
- Spider Cage
- Belt Guard

Motor & Pulley NOT Included
3-1/2" - 4" Recommended

ITEM #	DESCRIPTION	Rec. HP
02-UB0616HM	6" x 16' Utility Auger	2hp
02-UX0605	6" x 5' Extension	
02-UX0610	6" x 10' Extension	
02-UX0615	6" x 15' Extension	
05-A124	6" Intake Flight Support Kit	
05-A128	6" Intake Hopper	
05-A257	6" Bolt-On Hopper Lid Kit	
05-A132	6" Truss Kit	
05-A138	6" Tube Clamp	
05-A153	6" Feed Control Kit	

8" Utility Augers

INCLUDES:
- 14 Gauge Tubing, Painted
- 10 Gauge Flighting
- 12.7" 2-Belt Pulley
- (2) B51 Belts
- Spider Cage
- Motor Mount
- Belt Guard

Motor & Pulley NOT Included
3-1/4" - 3-1/2"" Recommended

ITEM #	DESCRIPTION	Rec. HP
02-UB0816HM	8" x 16' Utility Auger	2hp
02-UB0816HMT	8" x 16' Utility Auger (3-B Drive)	2hp
02-UX0805	8" x 5' Extension	
02-UX0810	8" x 10' Extension	
02-UX0815	8" x 15' Extension	
05-A126	8" Intake Flight Support Kit	
05-A130	8" Intake Hopper	
05-A258	8" Bolt-On Hopper Lid Kit	
05-A134	8" Truss Kit	
05-A140	8" Tube Clamp	

NOTE: Bulk Tank Augers units are furnished less intake guards. The are to be used in a BULK TANK ONLY! If removed from a bulk tank, an intake guard MUST be installed prior to use.

4" Bulk Tank Augers

INCLUDES:

- 16-Gauge Galvanized Housing
- 10 Gauge Flight
- 1" High Yield Tube
- 8" 1-Groove Pulley
- Motor Mount
- Belt Guard w/ Belts
- Flight Connection Stub
- Recommended 2.5" Motor Pulley (Not Included)

ITEM #	DESCRIPTION	Rec. HP
GBF41100	4" x 11' Bulk Tank Auger	1/2hp
GBF41500	4" x 15' Bulk Tank Auger	3/4hp
GBF42000	4" x 20' Bulk Tank Auger	1hp
GCE45000	4" x 5' Extension Tube & Flight	
GCE41000	4" x 10' Extension Tube & Flight	
GCE42000	4" x 20' Extension Tube & Flight	

6" Bulk Tank Augers

INCLUDES:

- 16-Gauge Galvanized Housing
- 10 Gauge Flight
- 1.25" High Yield Tube
- 12" 1-Groove Pulley
- Motor Mount
- Belt Guard w/ Belts
- Flight Connection Stub
- Recommended 3"-3.5" Motor Pulley (Not Included)
- Optional 2-Belt Drive-Add $85

ITEM #	DESCRIPTION	Rec. HP
GBF6111A	6" x 11' Bulk Tank Auger	1hp
GBF6161A	6" x 16' Bulk Tank Auger	2hp
GBF6211A	6" x 21' Bulk Tank Auger	3hp
GCE65001	6" x 5' Extension Tube & Flight	
GCE61001	6" x 10' Extension Tube & Flight	
GCE62001	6" x 20' Extension Tube & Flight	

8" Bulk Tank Augers

INCLUDES:

- 12 Gauge Galvanized Housing
- 7 Gauge Dura-Edge Fligh
- 1.9" Flighting Tube
- 12" 2-Groove Pulley
- Motor Mount
- Belt Guard
- Connecting Band (if required)
- Flight Connection Stub
- Recommended 3" Motor Pulley (Not Included)

ITEM #	DESCRIPTION	Rec. HP
GBF8111A	8" x 11' Bulk Tank Auger	2hp
GBF8161A	8" x 16' Bulk Tank Auger	3/5hp
GBF8211A	8" x 21' Bulk Tank Auger	5/7.5hp
GCE85001	8" x 5' Extension Tube & Flight	
GCE81001	8" x 10' Extension Tube & Flight	

* See Other Pages For Intake Guards, Hoppers, Spouts & Other Auger Components

UNDERCARRIAGE FOR AUGERS	
ITEM #	DESCRIPTION
F6061A8	6" Heavy-Duty w/ Winch
F8061A8	8" Heavy-Duty w/ Winch
F1340C8	10" Heavy-Duty w/ Winch

ITEM #	DESCRIPTION
MASTERFLASH #2	7/8" to 4"
MASTERFLASH #4	2-3/4" to 7"
MASTERFLASH #6	4-3/4" to 10"
MASTERFLASH #8	6-3/4" to 13-1/2"
MASTERFLASH #9	9-1/2" to 20-1/2"
MASTERFLASH #10	12" to 28-1/2"

All augers are priced UNASSEMBLED. Assembly can be done for an additional charge

45° DISCHARGE SPOUTS

Size	Part #
4"	GK2578
6"	GK2421
8"	GK3425
10"	GK3386
12"	GK2413
14"	H2414A

60° DISCHARGE SPOUTS

Size	Part #
6"	GK2513
8"	GK1503
10"	GK1504
12"	GK4396
13"	H2309A

90° DISCHARGE SPOUTS

Size	Part #
4"	GK2574
6"	GK3381
8"	GK3393
10"	GK3396
12"	GK3390
13"	H2307A
14"	H2407A

GALV FLEX PIPE

Size	Part #
4"	Flex-Galv-4''
5"	Flex-Galv-5"
6"	Flex-Galv-6''
8"	Flex-Galv-8''
10"	Flex-Galv-10''

DROPSOCKS - Black Cordura

		Part #
For 6" Spouts	6-1/4" x 24" Long	Dropsock-06x24
	6-1/4" x 36" Long	Dropsock-06x36
For 8" Spouts	8-1/4" x 24" Long	Dropsock-08x24
	8-1/4" x 36" Long	Dropsock-08x36
For 10" Spouts	10-1/4" x 24" Long	Dropsock-10x24
	10-1/4" x 36" Long	Dropsock-10x36
For 12" Spouts	12-1/4" x 24" Long	Dropsock-12x24
	12-1/4" x 36" Long	Dropsock-12x36
For 14" Spouts	14-1/4" x 24" Long	Dropsock-14x24
	14-1/4" x 36" Long	Dropsock-14x36

PLASTIC HOPPERS	Part #
Mini Poly Triangle Hopper (23.5" x 30" x 17"H)	F215
Standard Triangle Hopper (41" x 47" x 24"H)	F210
Large "Whopper" Hopper (50" Round x 19.5"High)	F211

INTAKE GUARD w/ BEARING

4"	G9341
6"	G9342
8"	G9343
10"	G9344
12"	H2205A

Shafts, Hangers, Bushings

DRIVE SHAFTS w/ Keyway	
PART #	**DESCRIPTION**
Shaft-1D	1" Diameter Drive Shaft
Shaft-1-1/4D	1-1/4" Diameter Drive Shaft
Shaft-1-1/2D	1-1/2" Diameter Drive Shaft
Shaft-1-1/2Step	Stepped Drive Shaft 1-1/2" to 1-1/4"
Shaft-2D	2" Diameter Drive Shaft
Shaft-2-7/16D	2-7/16" Diameter Drive Shaft
Shaft-3D	3" Diameter Drive Shaft

CONNECTING SHAFTS (Standard)	
PART #	**DESCRIPTION**
Shaft-7/8C	7/8" Connecting Shaft
Shaft-1C	1" Connecting Shaft
Shaft-1-1/4C	1-1/4" Connecting Shaft
Shaft-1-1/2C	1-1/2" Connecting Shaft
Shaft-2C	2" Connecting Shaft
Shaft-2-7/16C	2-7/16" Connecting Shaft
Shaft-3C	3" Connecting Shaft

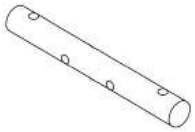

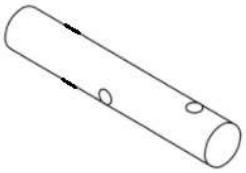

EXTENDED CONNECTING SHAFTS (Hanger)	
PART #	**DESCRIPTION**
Shaft-1H	1" Hanger Shaft
Shaft-1-1/4H	1-1/4" Hanger Shaft
Shaft-1-1/2H	1-1/2" Hanger Shaft
Shaft-2H	2" Hanger Shaft
Shaft-2-7/16H	2-7/16" Hanger Shaft

INTAKE TAIL STUB SHAFTS	
PART #	**DESCRIPTION**
Shaft-7/8T	7/8" Tail Stub Shaft
Shaft-1T	1" Tail Stub Shaft
Shaft-1-1/4T	1-1/4" Tail Stub Shaft
Shaft-1-1/2T	1-1/2" Tail Stub Shaft
Shaft-2T	2" Tail Stub Shaft
Shaft-2-7/16T	2-7/16" Tail Stub
Shaft-3T	3" Tail Stub

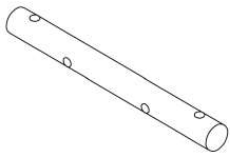

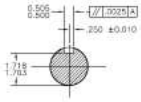

CUSTOM SHAFTS

We Can Make Most
Custom Shafts
Up To 4" Diameter

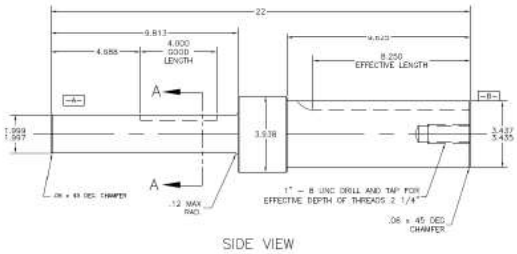

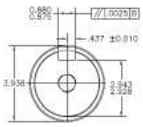

WELD-IN BUSHINGS FOR FLIGHTING					
PART #	**OD.**		**ID.**		**LENGTH**
Bush-1022680	1.00"	x	13/16"	x	3-5/8"
Bush-51144	1.25"	x	1"	x	4-3/4"
Bush-1015317	1.65"	x	1.02"	x	2-1/4"
Bush-52805	1.66"	x	1.015"	x	4-3/8"
Bush-52806	1.66"	x	1.265"	x	4-3/8"
Bush-52807	1.66"	x	1.515"	x	4-3/8"
Bush-52808	2.10"	x	1.265"	x	4-3/8"
Bush-52809	2.10"	x	1.515"	x	4-3/8"
Bush-53286	2.10" Rd.	x	1-1/2" Sq.	x	2"
Bush-62044	2.16"	x	1.00"	x	4-3/4"
Bush-1008611	2.60"	x	2.015"	x	4-3/8"
Bush-50434	3.06"	x	2.455"	x	4-3/8"

INTERNAL HANGER BEARINGS		
AUGER DIA.	**DESCRIPTION**	
6"	Internal Hanger Bearing w/ Bronze Bushing	6314F
	External Mounting Plate	1012079
	Replacement Bronze Bushing (1" I.D.)	6303D
8"	Internal Hanger Bearing w/ Bronze Bushing	8392C
	External Mounting Plate	1012295
	Replacement Bronze Bushing (1.25" I.D.)	8379C
10"	Internal Hanger Bearing w/ Bronze Bushing	1055D
	External Mounting Plate	1012296
	Replacement Bronze Bushing (1.5" I.D.)	1051D
12"	Internal Hanger Bearing w/ Bronze Bushing	1264D
	External Mounting Plate	1012367
	Replacement Bronze Bushing (2" I.D.)	1254D
14"	Internal Hanger Bearing w/ Bronze Bushing	1022390
	External Mounting Plate (Not Needed)	-----
	Replacement Bronze Bushing (2" I.D.)	1254D

6" U-TROUGH AUGERS

DESCRIPTION	PART #
7" x 10' 14ga. HR Painted U-Trough	AUUT061410
6" x 9'10" Standard Screw, 1-1/2" Shaft	AUSC06H308
6" x 9'10" Heavy Screw, 1-1/2" Shaft	AUSC06H312
6" x 9'10" Std. Flighting Only	AUFL06H308
6" x 9'10" Heavy Flighting Only	AUFL06H312
7" U-Trough Flange, Loose	AUTF0600
6" U-Trough Auger Cover (per foot)	AUUA0602
Lid Splice For 7" U-Trough	AUUTLS07
Lid End Cap For 7" U-Trough	AUUTLE07
6" Sq. Discharge Spout, Loose	AUSP0601
6" Sq. Discharge Spout, Welded	AUSP0602
1-1/2" Hanger for 6" Auger, Less Bearing	AUHN1001
1-1/2" Wood Bearing Insert Only	PTWB0108
1-1/2" Nylon Bearing Insert Only	AUNB0108
1-1/2" Drive Shaft	AUDS0108
1-1/2" Coupler Shaft	AUCS0108
1/2" x 3" Coupler Bolt w/ Lock Nut	HWMB1003
1-1/2 End Shaft	AUES0108
7" U-Trough End Plate For 1-1/2" Bearings	AUEP060108
1-1/2" Four-Bolt Flange Bearing (Dodge)	131117
1-1/2" Shaft Pipe Bushing For 2" Std. Pipe	AUPB0108
7" U-Trough Saddle	AUUS0700
Supporting Foot	AUST0099
1/4" UHMW "U" Liner (per foot)	AUUH1001
10ga. HR Bolt-In Liner (per foot)	AUSL0600H
10ga. Galv. Bolt-In Liner (per foot)	AUSL0600G
10ga. HR Weld-In Liner (per foot)	AUSL0600W
Steel Shroud (per foot)	AUSH0600

9" U-TROUGH AUGERS

DESCRIPTION	PART #
10" x 10' 14ga. Galv. Stand. U-Trough	AUUT091410
10" X 10' 10Ga. Galv. Heavy U-Trough	AUUT091010
9" x 9'10" Standard Screw, 1-1/2" Shaft	AUSC09H306
9" x 9'10" Heavy Screw, 1-1/2" Shaft	AUSC09H312
9" 9'10" X-tra Heavy Screw, 3" Shaft	AUSC09H412
9" x 9'10" Std. Flighting Only	AUFL09H306
9" x9'10" Heavy Flighting Only	AUFL09H312
10" U-Trough Flange, Loose	AUTF0900
9" U-Trough Flat Cover (per foot)	AUUA0902
Lid Splice For 10" U-Trough Cover	AUUTLS10
Lid End Cap For 10" U-Trough	AUUTLE10
9" U-Trough Auger Hip Roof Cover	AUUA0903
Hip Roof Lid Splice For 10" U-Trough	AUUTLSH10
Hip Roof End Cap For 10" U-Trough	AUUTLEH10
10" Sq. Discharge Spout, Loose	AUSP0901
10" Sq. Discharge Spout, Welded	AUSP0902
1-1/2" Hanger-Style 226 F/ 9" Auger, Less Bearing	AUHN1002
2" Hanger-Style 226 F/ 9" Auger, Less Bearing	AUHN1003
1-1/2" Wood Bearing Insert Only	PTWB0108
2" Wood Bearing Insert Only	PTWB0200
1-1/2" Nylon Bearing Insert Only	AUNB0108
2" Nylon Bearing Insert Only	AUNB0200
1-1/2" Drive Shaft	AUDS0108
2" Drive Shaft	AUDS0200
1-1/2" Coupler Shaft	AUCS0108
2" Coupler Shaft	AUCS0200
1/2" x 3" Coupler Bolt w/ Lock Nut	HWMB1003
5/8" X 5-3/8" Coupler Bolt w/ Lock Nut	HWMB1001
1-1/2" End Shaft	AUES0108
2" End Shaft	AUES0200
10" U-Trough End Plate For 1-1/2" Bearings	AUEP090108
10" U-Trough End Plate For 2" Bearings	AUEP090200
1-1/2" Four-Bolt Flanged Bearing (Dodge)	131117
2" Four-Bolt Flanged Bearing (Dodge)	131343
1-1/2" Shaft Pipe Bushing For 2" Std. Pipe	AUPB0108
2" Shaft Pipe Bushing For 2" Std. Pipe	AUPB0200
10" U-Trough Saddle	AUUS1000
Support Foot	AUST1001
1/4" UHMW "U" Liner F/ 10" U/T (per foot)	AUUH1004
10ga. HR, Bolt-In Liner F/ 10" U/T (per foot)	AUSL0900H
10ga. Galv, Bolt-In Liner F/ 10" U/T (per foot)	AUSL0900G
10ga. HR, Weld-In Liner F/ 10" U/T (per foot)	AUSL0900W
Steel Shroud	AUSH0900

12" U-TROUGH AUGERS

DESCRIPTION	PART #
13" x 12' Long 12 Ga. U-Trough, Galvanized	AUUT121212
13" x 12' Long 10 Ga. U-Trough, Galvanized	AUUT121012
12" x 11'10" Std Mtd Conveyor Screw, 2" Shaft	AUSC12H408
12" x 11'10" Heavy Mtd Conveyor Screw, 2" Shaft	AUSC12H412
12" x 11'9" Heavy Mtd Conv Screw, 2-7/16" Shaft	AUSC12H512
13" U-Trough Flange For 12" Auger	AUTF1200
12"Sq. Discharge Spout, Loose	AUSP1201
12" U-Trough Auger Cover /Ft	AUUA1202
Lid Splice for 13" U-Trough	AUUTLS13
Lid End Cap for 13" U-Trough	AUUTLE13
12" U-Trough Auger Hip Roof Cover	AUUA1203
Hip Roof Lid Splice for 13" U-Trough	AUUTLSH13
Hip Roof End Cap for 13" U-Trough	AUUTLEH13
¼" x 12" Dia. UHMW "U" Trough Liner	AUUH1007
10 Ga. HR, Bolt-in Liner for 13" U-T w/ 12" Auger	AUSL1200H
10 Ga. Galv, Bolt-in Liner for 13" U-T w/ 12" Auger	AUSL1200G
10 Ga. HR, Weld-in Liner for 13" U-Tw/ 12'' Auger	AUSL1200W
Steel Shroud for 13" U-Trough w/ 12" Auger	AUSH1200
13" End Plate for 2" Bearings, Galvanized	AUEP120200
13" End Plate for 2-7/16" Bearings, Galvanized	AUEP120207
13" U-Trough Saddle, Galvanized	AUUS1300
12" Supporting Foot	AUST1002
12" Style 226 2" Hanger Without Lube Pipe	AUHN1006
12" Style 226 2-7/16" Hanger Without Lube Pipe	AUHN1007
2" Wood Bearing	PTWB0200
2-7/16" Wood Bearing	PTWB0207
2" Nylon Bearing Insert	AUNB0200
2-7/16" Nylon Bearing Insert	AUNB0207
2" Drive Shaft	AUDS0200
2-7/16" Drive Shaft	AUDS0207
2" Connector Shaft	AUCS0200
2-7/16" Connector Shaft	AUCS0207
2" End Shaft Used Without End Seal	AUES0200
2-7/16" End Shaft Used Without End Seal	AUES0207
Pipe Bushing for a 2" Shaft w/ 2½" Std Pipe	AUPB0200
Pipe Bushing for a 2-7/16" Shaft w/ 3" Std Pipe	AUPB0207
2" Four-bolt Flange Bearing (Dodge)	131343
2-7/16" Four-bolt Flange Bearing (Dodge)	131135
5/8" x 3-5/8" Tem-u-lac Bolt with Lock Nut	HWMB1001
5/8" x 4-3/8" Tem-u-lac Bolt with Lock Nut	HWMB1002

Style 226

14" U-TROUGH AUGERS

DESCRIPTION	PART #
15" x 12' Long 12 Ga. U-Trough, Galvanized	AUUT141212
15" x 12' Long 10 Ga. U-Trough, Galvanized	AUUT141012
14" x 11'9" Std Mtd Conveyor Screw, 2-7/16" Shaft	AUSC14H508
14" x 11'9" Heavy Mtd Conveyor Screw, 3" Shaft	AUSC14H614
15" U-Trough Flange For 14" Auger	AUTF1400
14" Sq. Stud Spout Loose for 15" U-Trough, Galv	AUSP1401
14" U-Trough Auger Cover /Ft	AUUA1402
Lid Splice for 15" U-Trough	AUUTLS15
Lid End Cap for 15" U-Trough	AUUTLE15
14" U-Trough Auger Hip Roof Cover	AUUA1403
Hip Roof Lid Splice for 15" U-Trough	AUUTLSH15
Hip Roof End Cap for 15" U-Trough	AUUTLEH15
¼" x 14" Dia. UHMW "U" Trough Liner	AUUH1009
10Ga. HR, Bolt-in Liner for 15" U-T w/ 14" Auger	AUSL1400H
10Ga. Galv, Bolt-in Liner for 15" U-T w/ 14" Auger	AUSL1400G
10Ga. HR, Weld-in Liner for 15" U- w/ 14" Auger	AUSL1400W
Steel Shroud for 15" U-Trough w/ 14" Auger	AUSH1400
15" U-T End Plate for 2-7/16" Bearings, Galv	AUEP140207
15" U-T End Plate for 3" Bearings, Galv	AUEP140300
15" U-Trough Saddle, Galvanized	AUUS1500
14" Supporting Foot	AUST1003
14" Style 226 2-7/16" Hanger Without Lube Pipe	AUHN1009
14" Style 226 3" Hanger Without Lube Pipe	AUHN1010
2-7/16" Wood Bearing	PTWB0207
3" Wood Bearing	PTWB0300
2-7/16" Nylon Bearing Insert	AUNB0207
3" Nylon Bearing Insert	AUNB0300
2-7/16" Drive Shaft	AUDS0207
3" Drive Shaft	AUDS0300
2-7/16" Connector Shaft	AUCS0207
3" Connector Shaft	AUCS0300
2-7/16" End Shaft Used Without End Seal	AUES0207
3" End Shaft Used Without End Seal	AUES0300
Pipe Bushing for a 2-7/16" Shaft w/ 3" Std Pipe	AUPB0207
Pipe Bushing for a 3" Shaft w/ 3½" Std Pipe	AUPB0300
2-7/16" Four-Bolt Flange Bearing (Dodge)	131135
3" Four-Bolt Flange Bearing	NANF215-48
5/8" x 4-3/8" Tem-u-lac Bolt with Lock Nut	HWMB1002
¾" x 5" Tem-u-lac Bolt with Lock Nut	HWMB1004

16" U-TROUGH AUGERS

DESCRIPTION	PART #
17" x 12' Long 12 Ga. U-Trough, Galvanized	AUUT161212
17" x 12' Long 10 Ga. U-Trough, Galvanized	AUUT161012
16" x 11'9" Standard Mtd Conveyor Screw, 3" Shaft	AUSC16H610
16" x 11'9" Heavy Mtd Conveyor Screw, 3" Shaft	AUSC16H614
17" U-Trough Flange For 16" Auger	AUTF1600
16" Sq. Discharge Spout, Loose	AUSP1601
16" U-Trough Auger Cover /Ft	AUUA1602
Lid Splice for 17" U-Trough	AUUTLS17
Lid End Cap for 17" U-Trough	AUUTLE17
16" U-Trough Auger Hip Roof Cover	AUUA1603
Hip Roof Lid Splice for 17" U-Trough	AUUTLSH17
Hip Roof End Cap for 17" U-Trough	AUUTLEH17
¼" x 16" Dia. UHMW "U" Trough Liner	AUUH1011
10 Ga. HR, Bolt-in Liner for 17" U-T w/ 16" Auger	AUSL1600H
10 Ga. Galv, Bolt-in Liner for 17" U-Tr w/ 16" Auger	AUSL1600G
10 Ga. HR, Weld-in Liner for 17" U-T w/ 16" Auger	AUSL1600W
Steel Shroud for 17" U-Trough w/ 16" Auger	AUSH1600
17" U-Trough End Plate for 3" Bearings, Galv	AUEP160300
17" U-Trough Saddle, Galvanized	AUUS1700
16" Supporting Foot	AUST1004
16" Style 226 3" Hanger Without Lube Pipe	AUHN1011
3" Wood Bearing	PTWB0300
3" Nylon Bearing Insert	AUNB0300
3" Drive Shaft	AUDS0300
3" Connector Shaft	AUCS0300
3" End Shaft Used Without End Seal	AUES0300
Pipe Bushing for a 3" Shaft w/ 3½" Std Pipe	AUPB0300
3" Four-Bolt Flange Bearing	NANF215-48
3/4" x 5-1/2" Tem-u-lac Bolt with Lock Nut	HWMB1005

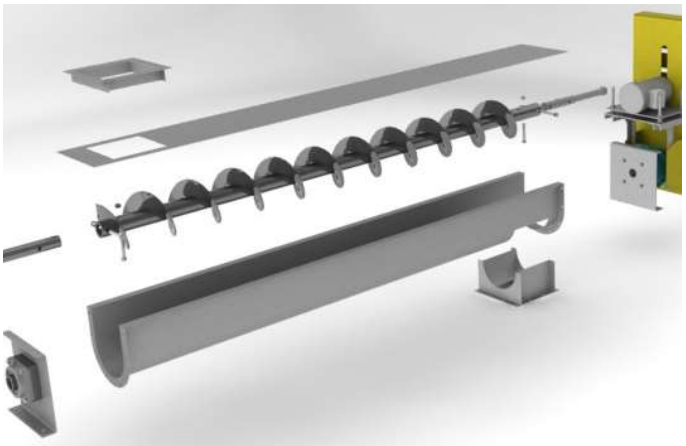

18" U-TROUGH AUGERS

DESCRIPTION	PART #
19" x 12' Long 10 Ga. U-Trough, Galvanized	AUUT181012
18" x 11'9" Standard Mtd Conveyor Screw, 3" Shaft	AUSC18H610
19" U-Trough Flange For 18" Auger	AUTF1800
18" Sq. Discharge Spout, Loose	AUSP1801
18" U-Trough Auger Cover /Ft	AUUA1802
Lid Splice for 19" U-Trough	AUUTLS19
Lid End Cap for 19" U-Trough	AUUTLE19
18" U-Trough Auger Hip Roof Cover	AUUA1803
Hip Roof Lid Splice for 19" U-Trough	AUUTLSH19
Hip Roof End Cap for 19" U-Trough	AUUTLEH19
¼" x 18" Dia. UHMW "U" Trough Liner	AUUH1013
10 Ga. HR, Bolt-in Liner for 19" U-T w/ 18" Auger	AUSL1800H
10 Ga. Galv, Bolt-in Liner for 19" U-T w/ 18" Auger	AUSL1800G
10 Ga. HR, Weld-in Liner for 19" U-T w/ 18" Auger	AUSL1800W
Steel Shroud for 19" U-Trough w/ 18" Auger	AUSH1800
19" U-Trough End Plate for 3" Bearings, Galv	AUEP180300
19" U-Trough Saddle, Galvanized	AUUS1900
18" Supporting Foot	AUST1005
18" Style 226 3" Hanger Without Lube Pipe	AUHN1012
3" Wood Bearing	PTWB0300
3" Nylon Bearing Insert	AUNB0300
3" Drive Shaft	AUDS0300
3" Connector Shaft	AUCS0300
3" End Shaft Used Without End Seal	AUES0300
Pipe Bushing for a 3" Shaft w/ 3½" Std Pipe	AUPB0300
3" Four-Bolt Flange Bearing	NANF215-48
3/4" x 5-1/2" Tem-u-lac Bolt with Lock Nut	HWMB1005

RACK & PINION SLIDES FOR U-TROUGHS

DESCRIPTION	PART #
8" Sq. Rack and Pinion Slide	RPSL0800
10" Sq. Rack and Pinion Slide	RPSL1000
12" Sq. Rack and Pinion Slide	RPSL1200
14" Sq. Rack and Pinion Slide	RPSL1400
16" Sq. Rack and Pinion Slide	RPSL1600
18" Sq. Rack and Pinion Slide	RPSL1800
24" Sq. Rack and Pinion Slide	RPSL2400
7" U-T Curved Gate Rack & Pinion w/6" Sq Disch.	RPSC0700
10" U-T Curved Gate Rack & Pinion w/10" Sq Disch.	RPSC1000
13" U-T Curved Gate Rack & Pinion w/12" Sq Disch.	RPSC1300
15" U-Trough Curved Gate Rack & Pinion w/14" Sq Disch.	RPSC1500
17" U-Trough Curved Gate Rack & Pinion w/16" Sq Discharge	RPSC1700

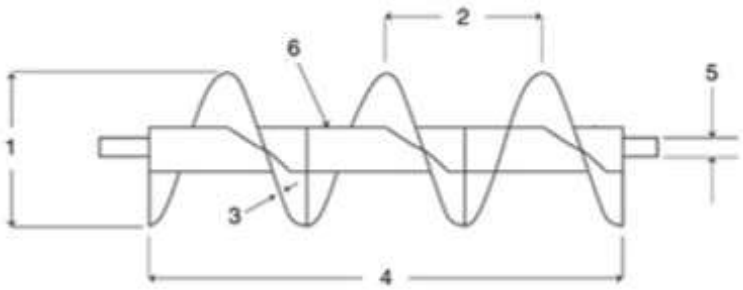

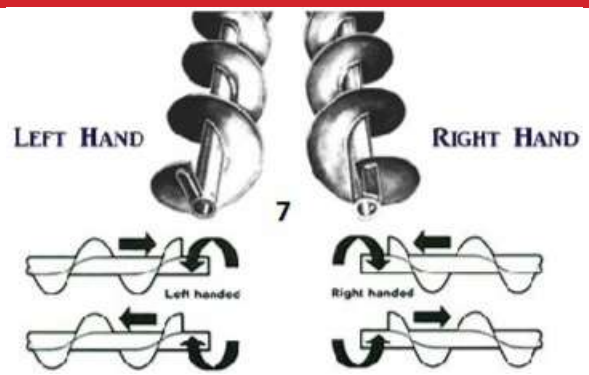

HELICOID CONVEYOR SCREWS & FLIGHT

	1	2	3	4	5	6	7
AUGER DIA.	SCREW O.D.	PITCH	EDGE THICKNESS	LENGTH	SHAFT DIAMETER	PIPE O.D.	RH/LH
4"	3.0"	3.0"	5/16"	20'	7/8"	0.8"	RH
	3.125"	3.125"	3/16"	20'	7/8"	0.8"	RH
	3.125"	3.125"	3/16"	20'	7/8"	0.8"	LH
6"	5"	5"	1/4"	20'	1"	1.9"	RH
	5"	5"	7Ga.	20'	1"	1-5/16"	RH
	5"	5"	7Ga.	20'	1"	1-5/16"	LH
8"	7"	7"	1/4"	20'	1-1/4"	1.9"	RH
	7"	7"	1/4"	20'	1-1/4"	1.9"	LH
	7"	7"	1/4"	20'	1-1/4"	2-3/8"	RH
	7"	7"	1/4"	20'	1-1/4"	2-3/8"	LH
	7"	7"	5/16"	20'	1-1/4"	2-3/8"	RH
10"	9"	9"	5/16"	20'	1-1/4"	2-3/8"	LH
	9"	9"	1/4"	20'	1-1/2"	2-3/8"	RH
	9"	9"	1/4"	20'	1-1/2"	2-3/8"	LH
	9"	9"	5/16"	20'	1-1/2"	2-3/8"	RH
	9"	9"	5/16"	20'	1-1/2"	2-3/8"	LH
12"	11"	11"	1/4"	20'	2"	2-7/8"	RH
	11"	11"	1/4"	20'	2"	2-7/8"	LH
	11"	11"	5/16"	20'	2"	2-7/8"	RH
	11"	11"	5/16"	20'	2"	2-7/8"	LH

Unmounted Flighting

Shivvers HD Auger

Description	Part #
5" HD Head Flight Auger (Drive Shaft Included)	271A-002W
5" HD Connecting Auger (10' Section)	89-010W
5" HD Connecting Auger (20' Section)	272E-003W
HD Connecting Shaft, 18" Lg.	272-002P
HD Roll Pin	F-1036-46

2/3-Pitch Unmounted Flighting - 30" Lengths

Recommended For ALL Auger Intakes

OD	Pitch	Edge Thickness	ID	Type	PART #
3"	2"	1/4"	1.5"	RH	Flight-3/2-1/4-RH/U(30")
5"	3"	1/4"	1.5"	RH	Flight-5/3-1/4-RH/U(30")
7"	4.5"	5/16"	1.9"	RH	Flight-7/4.5-5/16-HDRH/U(30")
7"	4.5"	5/16"	2-3/8"	RH	Flight-7/4.5-5/16-RH/U(30")
9"	6"	5/16"	2-3/8"	RH	Flight-9/6-5/16-RH/U(30")

Larger and Custom
Sizes Available
~Call For Pricing~

U-TROUGH FLIGHTING

1		2	3	4	5	7
SCREW O.D.	DUTY	PITCH	FLIGHT THICKNESS	LENGTH	SHAFT DIAMETER	RH/ LH
9"	Standard	9"	3/16"	10'	1-1/2	RH
	HD	9"	3/8"	10'	1-1/2	RH
12"	Standard	12"	1/4"	12'	2	RH
	HD	12"	3/8"	12'	2	RH
14"	Standard	14"	1/4"	12'	2-7/16	RH
	HD	14"	3/8"	12'	3"	RH
16"	Standard	16"	1/4"	12'	3"	RH
	HD	16"	3/8"	12'	3"	RH

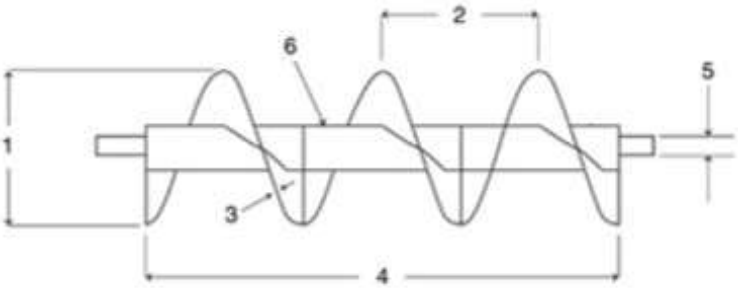

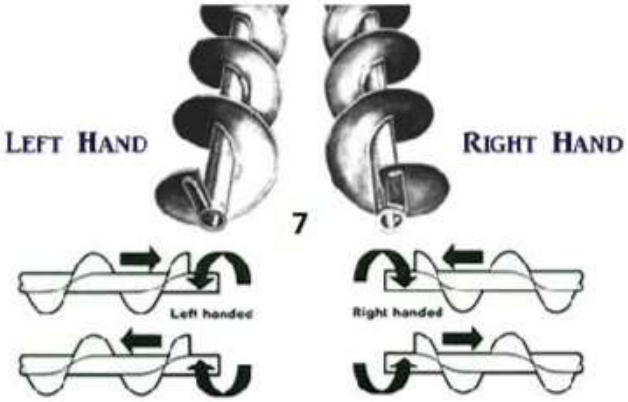

POLY CUPPED™ FLIGHTING

Lundell Plastics™ CORPORATION

Gentle Handling In All Applications

What happens when you combine the longevity of Lundell's poly technology with trusted university testing? You get Poly Cupped Flighting, a tough industry giant. Auger provide gentle handling of all sorts of seed and grain handling equipment around the farm. Whether you need to gently handle seed, beans, popcorn, food grain corn, peas, edible beans or just want to deliver more intact grain to your dryer or grain bin.

Higher Germination Rate

University testing proves that our poly will only decrease germination by 1.5%. Our closest rival decreases germination by nearly 4 times as much.*

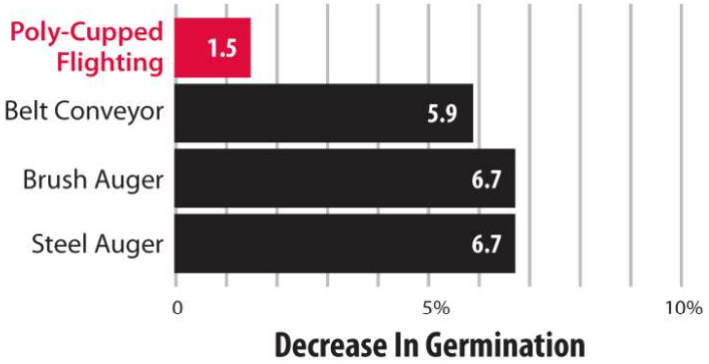

Impact of Bulk Seed Handling report summary
* Source: Impact of Bulk Seed Handling on Soybean Germination Rate
Authors: Dr. Matt Darr, Mr. Ben Rethmel, Mr Randall Reeder
Test Conducted at Ohio State University.

Seed Remains Intact

Another university test proves that with our poly, 99.62% of your seed stays intact. Steel is shown to do 5 times more damage to your seed.

Soybean Crack Test Results *		
Flighting Type	**Percent Breakage**	**Average Breakage**
Plastic Cup	0.38%	38
Bristle	0.35%	35
Steel	1.80%	180
Steel Cup	2.10%	210

Average breakage based on per 10,000 beans. Test ran with hydraulic motor at 12 gal/min (6" x 13' uni-swivel auger at a 45° angle). Average moisture content of the bean seed samples was 12%.

* Information used with permission from J & M Manufacturing Co.

5" Poly Cupped Flighting (for 6" tube auger)

DESCRIPTION	PART #
Poly Cupped Flighting Assy. 5" $/Ft. (Galv. Tube)	50AMBH
Poly Cupped Flighting Assy. 5" $/Ft. (Stainless Tube)	50ASBH
5" Black Cup Module, 4.10" Length	50MB0H
5" Black Cup Support Module, 4.10" Length	50MBSH
Galvanized Hex Center Tube ($/ft)	50H00M
Stainless Hex Center Tube ($/ft)	50H00S
Galvanized All-Hex Connector	50CAHM
Stainless All-Hex Connector	50CAHS
1" I.D. Bushing For Hex	50B10M
3/4" ID Bushing	50B07M
1" ID Keyed Bore Motor Coupler (accepts 1" shaft)	50C10M
Motor Drive Connector, Stainless	50CMDS
Folding Connector, Male (MS)	50CFMM
Folding Connector, Female (MS)	50CFFM

6" Poly Cupped Flighting (for 7" tube auger)

DESCRIPTION	PART #
Poly Cupped Flighting Assy. 6" $/Ft. (Galv. Tube)	60AMBH
Poly Cupped Flighting Assy. 6" $/Ft. (Stainless Tube)	60ASBH
6" Black Cup Module, 5" Length	60MB0H
6" Black Cup Support Module, 5" Length	60MBSH
Galvanized Hex Center Tube ($/ft)	50H00M
Stainless Hex Center Tube ($/ft)	50H00S
Galvanized All-Hex Connector	50CAHM
Stainless All-Hex Connector	50CAHS
1" I.D. Bushing For Hex	50B10M
1" ID Keyed Bore Motor Coupler	50C10M
Motor Drive, Stainless	50CFFM
Folding Connector, Male (MS)	50CFMM
Folding Connector, Female (MS)	50CFFM

7" Poly Cupped Flighting (for 8" tube auger)

DESCRIPTION	PART #
Poly Cupped Flighting Assy. 6" $/Ft. (Galv. Tube)	70AMBH
Poly Cupped Flighting Assy. 6" $/Ft. (Stainless Tube)	70ASBH
7" Black Cup Module, 5" Length	70MB0H
7" Black Cup Support Module, 5" Length	70MBSH
Galvanized Hex Center Tube ($/ft)	70H00M
Stainless Hex Center Tube ($/ft)	70H00S
Galvanized All-Hex Connector	70C2PM
Stainless All-Hex Connector	70C2PS
1" I.D. Bushing For Hex	70B10M
1" ID Keyed Bore Motor Coupler	70C10M
Folding Connector, Male (MS)	70CFMM
Folding Connector, Female (MS)	70CFFM
Folding Connector, Male (Stainless)	70CFMS
Folding Connector, Female (Stainless)	70CFFS

9" Poly Cupped Flighting (for 10" tube auger)

DESCRIPTION	PART #
Poly Cupped Flighting Assy. 9" $/Ft. (Galv. Tube)	90AMBH
Poly Cupped Flighting Assy. 9" $/Ft. (Stainless Tube)	90ASBH
9" Black Cup Module, 7.33" Length	90MB0H
9" Black Cup Support Module, 7.33" Length	90MBSH
Galvanized Hex Center Tube ($/ft)	90H00M
Stainless Hex Center Tube ($/ft)	90H00S
Galvanized All-Hex Connector	90C2PM
Stainless All-Hex Connector	90C2PS
1" ID Bushing For Hex	90B10M
1" ID Bushing For Hex (Stainless)	90B10S
1-1/4" ID Bushing For Hex	90B12M
1-1/4" ID Bushing For Hex (Stainless)	90B12S
1-1/2" ID Bushing For Hex	90B15M
1-1/2" ID Bushing For Hex (Stainless)	90B15S

SHAFTS

DESCRIPTION	PART #
1" Keyed Shaft 7" Long	00K10M-07
1" Keyed Shaft 10" Long	00K10M-10
1" Keyed Shaft 16" Long	00K10M-16
1" Stub Shaft	00S10M
1-1/4" Keyed Shaft 10" Long	00K12M-10
1-1/4" Keyed Shaft 13" Long	00K12M-13
1-1/4" Keyed Shaft 17" Long	00K12M-17
1-1/4" Stub Shaft (per inch)	00S12M
1-1/2" Stub Shaft (per inch)	00S15M
2" Stub Shaft (per inch)	00S20M

Heavy-Duty Options
&
Sizes Available Up To 19"
~ Call For Pricing ~

AGI HUTCHINSON MAYRATH

HX SERIES

SWINGAWAY AUGERS

53' - 83' Length | Capacity up to 6,600 BPH

Heights measured from bottom of auger spout to ground.

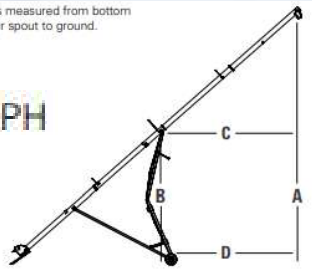

HEIGHT | REACH | WHEEL | SPECIFICATIONS

	A			B			C			D		
	HEIGHT LOWERED	HEIGHT HALFWAY	HEIGHT RAISED	HEIGHT LOWERED	HEIGHT HALFWAY	HEIGHT RAISED	REACH LOWERED	REACH HALFWAY	REACH RAISED	REACH LOWERED	REACH HALFWAY	REACH RAISED
10-63	12'	28' 2"	43' 7"	6' 9"	14' 8"	22' 5"	32'	29' 4"	24' 2"	31' 4"	28' 10"	23' 4"
10-73	11' 2"	30'	47' 10"	6' 9"	16' 4"	25' 4"	36'	33' 4"	28'	35' 3"	32' 11"	27' 9"
10-83	11' 8"	34' 2"	55' 3"	6' 9"	18' 1"	28' 6"	41' 9"	38' 7"	32' 1"	40' 11"	37' 5"	29' 10"

FEATURES:
- Square, One-Bolt Connections
- CV PTO Reduces Vibration
- Easy, Accessible Service Point To U-Joints, Chains, Bearings and Gearboxes
- Tool-Free Inspection Areas In Hopper Chain Cover, Neck Transition, Boot Clean-Out and Swing Head
- Cross Members To Maximize Reach and Reduce Swaying While In Use
- Hopper Lift Arm and Hopper Can Be Positioned On The Left or Right Hand Side Of The Auger To Easily Unload Grain From Either Side
- Dual Flighting In Hopper Allowing Grain To Be Directed To Center Of The Hopper

OPTIONAL FEATURES:
- Power Swing (Hydraulic or Electric Remote)
- Working Lights Kit
- Right-Angle Drive
- Reducer/Reverser

TYPICALLY IN STOCK & READY TO WORK

SPECIFICATIONS (10-63 and 10-73)
TUBING GAUGE: 12ga.
TUBE CONNECTORS: HD 3/16" Angle Flange
MAIN FLIGHTING: 9" x 7ga.
Exenteded Wear At Points
FLIGHTING SHAFT: 2" OD x 11ga. Tube
UPPER BEARING: 1-1/4" Greasable 4-Bolt Bearing
LOWER BEARING: 1-1/4" Greaseable 4-Bolt Bearing
UNDERCARRIAGE: 4" x 8" Scissor Lift
TIRES: 16" TRF
LOW PROFILE HOPPER HEIGHT: 10.5"
PSI TO RAISE AUGER: 1200 (10-63) / 1400 (10-73)
HP REQUIRED (Dry Wheat): 60HP (10-63) / 65HP (10-73)
WHEEL TREAD WIDTH: 132"
TRANSPORT HEIGHT: 13' 8" (10-63) / 13' 4" (10-73)

AGI HUTCHINSON

WRX
TRUCK AUGER

FEATURES:
- Automatic Brake Winch
- One-Bolt Flight Connections For Proper Alignment
  8" Uses Round Connection Shafts
  10" Uses Square Connection Shafts
- Solid Tube Drive Guard
- Wear Edge Technology To Extend Life of Flighting
- Forged Steel Gears w/ Tapered Roller Bearings In Gearbox Running In Oil
- Shielded Auger Intake w/ Quick-Remove Clevis Special Low Pitch with Edge Technology
- Lubricated Upper Drive To Extend Life of Chain and Sprockets

OPTIONAL FEATURES:
- Hydraulic Winch Lift
- Steel Intake Hoppers
- Enclosed Collapsible Hopper
- Wheel Kit For Intake

SPECIFICATIONS

	WRX8	WRX10
Tube Gauge	14ga.	12ga.
Main Flighting	7" OD x 10ga.	9" OD x 7ga.
Intake Flighting	10ga. Lower Pitch w/ Wear Edge Techonology	
Flighting Shaft	1.66" OD x 11ga. Tubing	2" OD x 11ga. Tubing
Drive Shaft	1-1/4" x 11ga. Tubing	
Driveshaft Bearings	1-1/4" Oil Impregnated Hardwood	
Hubs & Wheels	4-Bolt Ag Type Hubs w/ 15" Wheels	
Top Drive	#80 Roller Chain & Hardened Sprockets	
Capacity - Dry Wheat or Corn Auger 1/2 Raised	Up to 3,000 BPH	Up to 4,800 BPH

HORSEPOWER REQUIREMENTS

	WRX8		WRX10	
	PTO	ELECTRIC	PTO	ELECTRIC
31'	15	5	30	10
41'	20	5-7.5	40	15
51'	25	10-15	45	20
61'	35	15-20	55	20
71'	45	20	60	25

8" TOP-DRIVE REPLACEMENT PARTS
(WRX SERIES 2020+)
WRX 8-36 THRU WRX 8-71

Hutchinson

* NEW-STYLE * WRX SERIES

	PART #	
REPLACEMENT FLIGHTING		
Upper Flight Weldment 8-36 / 41 / 51 / 61 / 71	200475	
Middle Flight Weldment 8-61 / 71	10-27319	
Lower Flight w/ Intake Flight	8-36	10-29732
	8-41	10-29733
	8-51	10-29735
	8-61	10-29732
	8-71	10-29734
Boot Flight Only	10-18920	
DRIVE COMPONENTS		
Drive Shaft Bearing Hanger Bracket	10-23250	
80B18 X 1 Auger Drive Sprocket	10-23181	
80B12 X 1-1/4 Drive Shaft Sprocket	10-23180	
Chain #80 X 31P W/Conn Link (Heavy)	10-23185	
Intake W/Shield,Bushing	10-29726	
1" Tail Bushing	10-19149	
80X9T 1/2 Bore Idler Drive Sprocket	200477	
1-1/4" Wood Bearing	10-18691	
Bearing, 1-1/4" P4-Bolt Flange 4500067	10-19567	
1-1/4" Flange, 2-Hole 4500062	10-18695	
Drive Shaft Connector, 1-1/4"	10-19770	
Drice Shaft Connector, 1"	10-19119	
Disharge Spout, 8"	10-29306	
Back Band f/ Discharge Spout	10-19460	
GEARBOX		
Gearbox, Complete	10-29676	
Cone Bearing	10-19265	
Cup	10-19266	
Gearbox Gear	10-18428	
Gearbox Shaft	10-20429	
Gearbox Shaft	10-17176	
Seal	10-18427	
Gearbox Seal	10-18403	
Gearbox Snap Ring	10-18405	
Gearbox Spacer	10-18426	
Gasket, Gearbox Shim	10-18553	
O-Ring, 105 X 3.1mm	10-27701	
Gearbox Snap Ring	10-18962	
Gearbox Shim	10-18411	

	PART #	
PTO DRIVE KIT		
Complete PTO Drive Kit	36	05-A430RD
	41	05-A431RD
	51	05-A433RD
	61	05-A435RD
	71	05-A436RD
PTO Shaft, Yellow End (60")	10-19806	
W80 Half Clamp 10716	10-19460	
WRX 8 Sd Clamp-On Bearing Mnt Assy	200511RD	
Flange Bearing Hanger Bracket Xta	10-23250RD	
Gearbox, W130-31/36 Sd	10-29676	
#80H X 27P Chain Connect & Half Lnk	201004	
1-1/4 Wood Bearing	10-18691	
1-1/4" Flange, 2-Hole 4500062	10-18695	
1 Driveshaft Connectr 4503149	10-19119	
#80 Half Link (Heavy)	10-17400	
80B12 X 1 Sprocket	200585	
ELECTRIC DRIVE KIT		
Complete Electric Drive Kit	31-41	05-A418
	51-71	05-A423RD
Stx2/Xta Gearbox Assembly	10-23217	
Gearbox, W130-31/36 Sd	10-29676	
Wrx Emd Mount Assy	10-24309	
Wrx100 Emd Belt Guard Assy	10-24313	
Belt, B62	10-19934	
Pulley, 15 X 1.25 Dbl B	10-19950	
Flex Cplr, 1.25Bolt X 1" Key	10-19674	
7.7" Double Pulley, 1-1/8" Bore	201337	
7.7" Double Pulley, 1-3/8" Bore	201338	
Motor Shim Kit	05-A476	
Motor Shims	201250RD	
PTO PARTS		
PTO Shaft, Yellow End (60")	10-19806	
PTO Half Shaft, Tractor Side	10-18601	
PTO Half Shaft, Auger Side	10-18599	
14R Tractor Yoke	10-18477	
Auger Yoke	10-18105	
14R Cross Kit	10-18459	
HYDRAULIC LIFT KIT		

*** NEW-STYLE ***
WRX SERIES

Hutchinson

10" TOP-DRIVE REPLACEMENT PARTS
(WRX SERIES 2020+)
WRX 10-31 THRU WRX 10-71

	PART #	
REPLACEMENT FLIGHTING		
Upper Flight Weldment 10-31 / 36 / 41 / 51 / 61 / 71	10-23183	
Middle Flight Weldment 10-61 / 71	10-21693	
Lower Flight w/ Intake Flight	10-31	10-23186
	10-41	10-23188
	10-51	10-23189
	10-61	10-23187
	10-71	10-23728
Intake Flight Only	10-17535	
DRIVE COMPONENTS		
Drive Shaft Bearing Hanger Bracket	10-23250	
80B19 x 1-1/4 Auger Drive Sprocket	10-23831	
80B12 X 1-1/4 Drive Shaft Sprocket	10-23180	
80B18 x 1-1/4 Drive Shaft Sprocket (41 Only)	10-19779	
80X9T 1/2 Bore Idler Drive Sprocket	200477	
Chain #80 X 31P W/Conn Link (Heavy)	10-23185	
Flight Connecting Shaft	10-21690	
1-1/4" Wood Bearing	10-18691	
Bearing, 1-1/4" P4-Bolt Flange 4500067	10-19567	
1-1/4" Flangette, 2-Hole 4500062	10-18695	
Drive Shaft Connector, 1-1/4"	10-19770	
Drice Shaft Connector, 1"	10-19119	
Discharge Spout, 10" (2pc.)	200568RD	
Intake Guard w/ Bushing	10-29738	
1-1/4" Intake Bushing	10-19776	
GEARBOX		
Gearbox, Complete	10-29676	
Cone Bearing	10-19265	
Cup	10-19266	
Gearbox Gear	10-18428	
Gearbox Shaft	10-20429	
Gearbox Shaft	10-17176	
Seal	10-18427	
Gearbox Seal	10-18403	
Gearbox Snap Ring	10-18405	
Gearbox Spacer	10-18426	
Gasket, Gearbox Shim	10-18553	
O-Ring, 105 X 3.1mm	10-27701	
Gearbox Snap Ring	10-18962	
Gearbox Shim	10-18411	

	PART #	
PTO DRIVE KIT		
Complete PTO Drive Kit	31	05-A419RD
	41	05-A421RD
	51	05-A424RD
	61	05-A425RD
	71	05-A426RD
PTO Shaft, Yellow End (60") Complete	10-19806	
Clamp, W100 Half	10-19801	
Saddle, W100 Sd 13181	10-19804	
Clamp-On Bearing Mnt Assy, 10"	10-24325	
Flange Bearing Hanger Bracket Xta	10-23250WH	
Gearbox, Complete	10-29676	
Flex Cplr, 1.25Bolt X 1" Key	10-19674	
#80H X 27P Chain Connect & Half Lnk	201004	
1-1/4" Wood Bearing	10-18691	
1-1/4" Flangette, 2-Hole 4500062	10-18695	
80B12 X 1-1/4 Sprocket	10-23180	
ELECTRIC DRIVE KIT		
Complete Electric Drive Kit	31-41	05-A418
	51-71	05-A423RD
Gearbox Assembly w/ Drive Sprocket	10-23217	
Gearbox Only	10-29676	
Motor Mount Assembly	10-24309	
Belt Guard Assembly	10-24313	
Belt, B62	10-19934	
15" 2B Pulley, 1-1/4" Bore (31/41)	10-19950	
15" 3B Pulley, 1-1/4" Bore (51-71)	10-19933	
7.7" 2B Drive Pulley (31/41)	201338	
7.7" 3B Drive Pulley (51-71)	201340	
Flex Coupler, 1.25Bolt X 1" Key	10-19674	
Motor Shim Kit	05-A476	
Motor Shims	201250RD	
PTO PARTS		
PTO Shaft, Yellow End (60")	10-19806	
PTO Half Shaft, Tractor Side	10-18601	
PTO Half Shaft, Auger Side	10-18599	
14R Tractor Yoke	10-18477	
Auger Yoke	10-18105	
14R Cross Kit	10-18459	
HYDRAULIC LIFT KIT		
Hydraulic Lift Kit (Less Hoses & Fittings)	05-A197	

Hutchinson

*** NEW-STYLE ***
HX SERIES

10" SWING-AWAY REPLACEMENT PARTS
(HX SERIES 2020+)
HX 10-63 & HX 10-73

DESCRIPTION	PART #
TUBE & TRUSS COMPONENTS	
Lower Flight w/ Boot Flight (HX 10-63)	10-21692
Lower Flight w/ Boot Flight (HX 10-73)	10-21694
Boot Flight Only	10-21708
Flight Connection Shaft	10-21690
Middle Flight Section (63/73)	10-21693
Upper Flight Section (53/63/73)	10-21696
4-Bolt Flange Bearing, 1-1/4"	131113
Thrust Adjuster Cover	10-27576
Bushing, Thrust Adjuster	10-21657
Discharge Spout, 10"	200568RD
AXLE HUB & COMPONENTS	
Hub Assembly, Complete	10-17013
Hub Only	10-17009
Spacer Bushing, Short	10-20297
Large Bearing (4504041-2)	10-17007
Hub Seal (4504041-1)	10-17006
Cone Bearing (4500059-3)	10-19265
Cup (4500059-4)	10-19266
Large Hub Cap (4504041-3)	10-17008
SWING TUBE	
Incline Flight	10-21711
Double Roller Chain	10-21571
Upper Gearbox, Complete	10-18849
Spline U-Joint	10-18727
Cross Kit	10-17029
Gearbox Connector	10-21568

DESCRIPTION	PART #
BOOT	
Lower Gearbox, Complete	10-21549
Sprocket, 60B20 x 1-1/4"	10-18713
1-1/4" Bearing w/ Flangettes	10-19322
Sprocket, 60B18 x 1-1/4"	10-21567
4-Bolt Flange Bearing, 1-1/4"	131113
Chain	10-18726
PTO Shaft, Blue End CV	10-18484
2-Hole Flange, 1-1/4"	10-18695
Bearing Insert, 1-1/4"	SA207-20N
LOW PROFILE HOPPER	
Bushing, 1"	10-19149
Sprocket, DS50A10 x 1	10-21566
LP Hopper Flt Section 4504143	201868RD
LP Hopper Flt Flight, LH	201869RD
Bushing Support, LP Hpr Shaft	10-17352
Flangette	10-18694
U-Joint, 6R (1" x 1")	10-29175
Cross Kit	10-17029
Idler Sprocket, 50C15 x 5/8"	10-29894
LP Neck Flight Section	10-17356
10" Neck Flt Support Assembly	200401
Roller Chain, #50 -1R x 29P	10-21990
Chain, LP Hopper (#50 x 49P) 2021+	201454
Chain, LP Hopper (#50 x 49P)Prior to 2021	10-21991
Sprocket, 50B14 x 1 (348081)	10-19131
Bearing Insert, 1"	SA205-16N
Chain Tensioner 2021+	201452RD

* NEW-STYLE * HX SERIES

Hutchinson

10" SWING-AWAY REPLACEMENT PARTS
(HX SERIES 2020+)
HX 10-63 & HX 10-73

DESCRIPTION	PART #
UPPER GEARBOX PARTS (10-18849)	
Upper Gearbox, Complete	10-18849
Bearing Cone 4500059-3	10-19265
Cup 4500059-4	10-19266
Gearbox Spacer	10-18426
Gearbox Snap Ring	10-18962
Gearbox Shim	10-18411
Gearbox Gear	10-18964
Gasket, Gearbox Shim	10-18390
Gearbox Seal, 31.75, 60.3, 8	10-18427
Gearbox Seal, 31.75, 50.8, 8	10-18403
Gearbox Key	10-18380
Gearbox Shaft	10-18967
Gearbox Shaft	10-18972
LOWER GEARBOX PARTS (10-21549)	
Lower Gearbox, Complete	10-21549
Cone Bearing 4500059-3	10-19265
Cup 4500059-4	10-19266
Gearbox Spacer	10-18426
Gearbox Snap Ring	10-18962
Gearbox Shim	10-18411
Gearbox Gear	10-18964
Gasket, Gearbox Shim	10-18390
GB Seal, 31.75, 60.3, 8	10-18427
GB Seal, 31.75, 50.8, 8	10-18403
Gearbox Key	10-18380
Gearbox Grease Washer	10-18965
Gearbox Shaft	10-18970
MKX100 Lower Gearbox Shaft	10-21938

DESCRIPTION	PART #
PTO SHAFT PARTS (10-18484)	
PTO Shaft, Complete	10-18484
PTO Shaft, Tractor Half	10-18456
PTO Shaft, Auger Half	10-18457
14R Spring Lock Repair Kit	10-18458
14R Cross Kit	10-18459
14R Center Housing	10-18462
14R Cv Ball Yoke	10-18463
Bolt 5/16" X 1"Custom Shear	10-17126
PTO Bearing Retainer	10-18467
PTO Nylon Bearing	10-18468
PTO Nylon Bearing	10-18468
Ball Bearing Kit	10-18470
14R Shear Yoke Assm	10-18363
HYDRAULIC WINCH/VALVE PARTS	
Hydraulic Winch Gearbox	10-17625
Hyd Motor Bypass Valve (0700023)	10-28221
Relief Valve	10-28222
Hydraulic Motor	10-17626
Steel Elbow 90, 1/2FNPSMX3/8MNPT	1100625
Hydraulic Valve	10-17675

*** OLD-STYLE ***
Prior to 2020

Hutchinson

SWING-AWAY REPLACEMENT PARTS
(Prior to 2020)

	8" Serial # 914303 to Present	10"	
	ALL LENGTHS	36', 52', 62', 72'	82'
DESCRIPTION	PART #	PART	PART #
1" Head Bearing	6818D	8325A	8325A
Head Bearing Cover	1028492	1028360	1028360
Head Bearing Plate	1028491	1028346	1028346
Complete PTO Driveline	1011096	1011096	1017958
PTO Half Tube Assy. (Tractor Side)	1015288	1015288	1026018
PTO Half Shaft Assy. (Auger Side)	1015287	1015287	1026024
Lower Gearbox	1013274-2S	1012163-2S	1012163-2S
U-Joint Assembly (Upper to Lower Gearbox)	1012156	1027698	1012156
Swing-Hopper Front Bearing	6382C	1024761	1024761
Swing Hopper Replacement Flighting	1028763	1036563	1036563
Hopper Flight To U-Joint Conn. Shaft	552445	1013714	1013714
Hanger Bearing For Conn. Shaft	1024825	1027498	1027498
1" Bronze Bushing For Hanger Bearing	6303D	8379C	8379C
U-Joint Assy. From Hopper To Incline	6340A	1013676	1013676
Stub Shaft For Incline Flight	54498	1013684	1013684
Incline Flight Replacement	1018135P	1023555P	1023555P
Upper Incline Gearbox	1015281-1	1015281-1	1015281-1

Hutchinson

* OLD-STYLE *
Prior to 2020

TOP-DRIVE REPLACEMENT PARTS
(Prior to 2020)

	8"		10"		13"
	33' thru 57'	59' thru 71'	31' thru 51'	57' thru 71'	36'
DESCRIPTION	PART #	PART #	PART #	PART #	PART #
Bronze Bushing For Intake Guard	8379C	8379C	1051D	1051D	N/A
Complete PTO Driveline	1002171	1002172	1002172	1002172	1027696
PTO Half Shaft Assy. (Tractor Side)	1015284	1015286	1015286	1015286	N/A
PTO Half Tube Assy. (Auger Side)	1015283	1015285	1015285	1015285	N/A
Lower Gearbox	1001592-2	1006130-1	1006130-1	1006130-1	1013973
Coupler, Gearbox to Drive Shaft	1002383P	1002383P	1002383P	1002383P	1007599P
Coupler, Drive Shaft To Upper G/B	1002382P	1002382P	1002382P	1002382P	1037280
Bearing For Drive Shaft	6382C	6382C	6382C	6382C	3027A1
Flangette For Drive Shaft Bearing	54008	54008	54008	54008	3029A2
Upper Head Drive Gearbox	631368	631368	1001495	1001495	1034053-1
Belt Guard For Electric Drive	1002747	1002747	1039204	1039204	1039044
13.6" 4-Groove Pulley	N/A	N/A	N/A	N/A	4B136SK
15" 2-Groove Pullley	2B150SK	N/A	N/A	N/A	N/A
15" 3-Groove Pulley	3B150SK	3B150SK	3B150SK	N/A	N/A
15" 4-Groove Pulley	4B150SF	N/A	N/A	N/A	N/A
15.4" 4-Groove Pulley	N/A	4B154SF	N/A	4B154SF	N/A
Bushing SK-Style	SK-1	SK-1-1/4	SK-1-1/4	N/A	SK-1-1/4
Bushing SF-Style	N/A	SF-1-1/4	N/A	SF-1-1/4	N/A
B62 Belt	B62-C	B62-C	B62-C	N/A	N/A
B66 Belt	N/A	B66	N/A	B66-C	N/A
B70 Belt	N/A	N/A	N/A	N/A	B70-C

Hutchinson

INLINE (MID-DRIVE) REPLACEMENT PARTS

	8"	10"	
	ALL LENGTHS	LENGTHS: 32' / 42' / 52'	LENGTHS: 62' / 72'
DESCRIPTION	PART #	PART #	PART #
Bronze Bushing For Intake Guard	8379C	8379C	8379C
Complete PTO Driveline	1002171	1002172	1002172
PTO Half Shaft Assy. (Tractor Side)	1015284	1015286	1015286
PTO Half Tube Assy. (Auger Side)	1015283	1015285	1015285
Lower Intake Flight - Standard Duty	1013400P	1013113P	1013113P
Lower Intake Flight - Heavy Duty	N/A	1014704P	1014704P
Inline Gearbox	1013119-1	1012888-2	1012888-2
Belt Guard (For 15" Sheaves)	1013547	1013211	1013211
Belt Guard (For 20" Sheaves)	1036784	N/A	N/A
15" 2-Groove Sheave	2B150SK	N/A	N/A
15" 3-Groove Sheave	3B150SK	3B150SK	N/A
15" 4-Groove Sheave	N/A	N/A	4B150SF
20" 3-Groove Sheave	3B200SF	N/A	N/A
Bushing, SK	SK-1	SK-1-1/4	N/A
Bushing, SF	SF-1	SF-1-1/4	SF-1-1/4
Belt - B66	B66-C	N/A	N/A
Belt - B68	N/A	B68-C	N/A
Belt - B71	N/A	N/A	B71-C
Belt - B75	B75-C	N/A	N/A

Don't See The Part Listed That You Need?

Give Us A Call. Chances Are, We Have It In Stock!

NOTE: Hutchinson Has Discontinued Production Of Their In-Line Augers As Of 1/1/2020
Replacement Parts Will Be Available Until Approximately 2029 (Subject to Change)

POWERHEADS

Keyed Drive Shaft NOT Included

SLEEVE-MOUNT HORIZONTAL POWERHEADS

- Includes: 24" Painted Horizontal Powerhead without angle ring on outlet spout, connector sleeve, auger pulley and belts.
- Motor and motor pulley NOT included
- If listed as "Powerhead only (no hardware)", connector sleeve, pulley and belts are NOT included.
- Units listed with reducer included reducer

SIZE	DESCRIPTION	MAX HP	QTY. BELTS	DRIVE PULLEY	DRIVEN PULLEY	RPM	LBS.	ITEM #
4"	Powerhead only (no hardware)	3	---	2.75" OD	9" OD	500	35	G9299
6"	Powerhead only (no hardware)	5	---	3.5" OD	12" OD	480	42	E5600
	Powerhead with hardware	5	1	3.5" OD	12" OD	480	50	E5590
	Powerhead with hardware	10	2	3.5"OD	12" OD	480	52	E55901
8"	Powerhead only (no hardware)	10	---	3.5" OD	12" OD	480	60	E5601
	Powerhead with hardware	10	2	3.5" OD	12" OD	480	65	E5591
	Powerhead with hardware	20	3	3.5" OD	12" OD	480	60	E55911
10"	Powerhead only (no hardware)	10	---	3.5" OD	12" OD	480	80	E5602
	Powerhead with hardware	10	2	3.5" OD	12" OD	480	85	E5592
	Powerhead with hardware	20	3	3.5" OD	12" OD	480	90	E55921

NOTE: 10" Powerheads Require A 1-1/2" to 1-1/4" Stepped Drive Shaft (Part #: Shaft-1-1/2Step)

SLEEVE-MOUNT HORIZONTAL POWERHEADS w/ ANGLE RING ON DISCHARGE

- Includes: 24" Painted Horizontal Powerhead with angle ring on outlet spout, connector sleeve, auger pulley and belts.
- Motor and motor pulley NOT included
- If listed as "Powerhead only (no hardware)", connector sleeve, pulley and belts are NOT included.

SIZE	DESCRIPTION	MAX HP	QTY. BELTS	DRIVE PULLEY	DRIVEN PULLEY	RPM	LBS.	ITEM #
6"	Powerhead only (no hardware)	5	---	3.5" OD	12" OD	480	44	F4800
	Powerhead with hardware	5	1	3.5" OD	12" OD	480	65	E5890
	Powerhead with hardware	10	2	3.5" OD	12" OD	480	67	E5891
8"	Powerhead only (no hardware)	10	---	3.5" OD	12" OD	480	47	F4840
	Powerhead with hardware	10	2	3.5" OD	12" OD	480	75	E5892
	Powerhead with hardware	20	3	3.5" OD	12" OD	480	80	E5893

ANGLE RING MOUNT HORIZONTAL POWERHEADS

- Includes: 24" Painted Horizontal Powerhead with angle ring mount, stub auger, auger pulley and belts.
- Motor and motor pulley NOT included
- 12" with fully enclosed shield and poly belt driven reducer

SIZE	DESCRIPTION	MAX HP	QTY. BELTS	DRIVE PULLEY	DRIVEN PULLEY	RPM	LBS.	ITEM #
6"	Powerhead with hardware	5	1	3.5" OD	12" OD	480	50	E9704
	Powerhead with hardware	10	2	3.5" OD	12" OD	480	52	E9705
8"	Powerhead with hardware	10	1	3.5" OD	12" OD	480	60	E9714
	Powerhead with hardware	10	2	3.5" OD	12" OD	480	62	E9715
12"	Powerhead with hardware	15	3	4.88" OD	6.6" OD	420	320	EE430
	Powerhead with hardware	20	4	4.88" OD	6.6" OD	420	320	EE440

REF #	DESCRIPTION	QTY.	6" Part #	8" Part #	10" Part #
1	STD Powerhead Housing	1	E5567	E5568	E5569
2	6" Bearing Plate	1	E5676	---	---
	8" Bearing Plate	1	---	E5776	---
	10" Bearing Plate	1	---	---	E5659
3	Nut, 3/8" - 16 PLT	8-12	J1020	J1020	J1020
4	Hinged Motor Mount, Small	1	E5746	E5746	E5746
	Hinged Motor Mount, Large	1	---	E5765	E5765
5	Small Pivot Rod	1	E5744	E5744	E5744
	Large Pivot Rod	1	---	E57441	E57441
6	Outer Shield	1	E5973	E5973	E5973
7	Shield Bracket	2	E9316	E9316	E5974
8	Inner Shield	1	E5972	E5972	E5972
9	1" Flange Bearing w/ Lock Collar	2	J0003	---	---
	1-1/4" Flange Bearing w/ Lock Collar	2	---	J0010	J0010
	Bearing Spacer (not shown)	2	---	---	---
10	Bearing Bolt w/ Tab	2	E5570	---	---
	Bolt, 1/2"-13 x 1-1/2" PLT	2	---	J0730	J0730
11	Split Lock Washer, 7/16" PLT	2	J1210	---	---
	Split Lock Washer, 1/2" PLT	2	---	J1215	J1215
12	Nut, 7/16"-14 PLT	2	J1035	---	---
	Nut, 1/2"-13, PLT	2	---	J1040	J1040
13	Hairpin Clip	2	J5412	J5412	J5412
14	Tap Bolt, 3/4"-10 x 6" PLT	1	J0824	J0824	J0824

REF #	DESCRIPTION	QTY.	6" Part #	8" Part #	10" Part #
15	Nut, 3/4"-10 PLT	1	J1051	J1051	J1051
16	Machine Bushing, 3/4" x 1-1/4", 14ga.	1-20	J1260	J1260	J1260
17	Spacer, 3/8"	1	E5739	E5739	E5739
	Spacer, 2-7/16"	1	---	E5740	E5740
18	Bolt, 3/8"-16 x 1", PLT	4-6	J0606	J0606	J0606
19	Split Lock Washer, 3/8" PLT	4-6	J1205	J1205	J1205
20	Decal, Safe Operation	1	L0281	L0281	L0281
21	Bolt, 5/16"-18 x 1" PLT	8	J0527	J0527	J0527
22	Flat Washer, 5/16" PLT	4	J1111	J1111	J1111
23	Split Lock Washer, 5/16" PLT	8	J1200	J1200	J1200
24	Screw, 3/16"-18 x 1/2" PLT SL	4	J0519	J0519	J0519
25	Pulley, 12" x 1", Single Groove A-B	1	J0375	---	---
	Pulley, 12" x 1" 2-Groove B	1	J0380	---	---
	Pulley, 12" x 1-1/4" 2-Groove B	1	---	J0385	---
	Pulley, 12" x 1-1/4" 3-Groove B	1	---	J0391	J0391
	Pulley, 12" x 1-1/4" Single Groove A-B	1	---	J0388	---
26	Locking Collar, 1"	1	J0067	---	---
	Locking Collar, 1-1/4"	1	---	J0068	J0068
27	Key, 1/4" x 2-1/2"	1	E5720	E5720	E5720
28	Belt, BX48 BX50	1-2	J0220	J0220	J0224
	Belt, B52 "3 Drive Belt"	3	---	---	J0227
29	Decal, Do Not Enter Bin, Avoid Augers	1	L0258AS	L0258AS	L0258AS
30	Decal, Keep Away From Moving Parts	1	---	---	---

POWERHEADS

Keyed Drive Shaft NOT Included

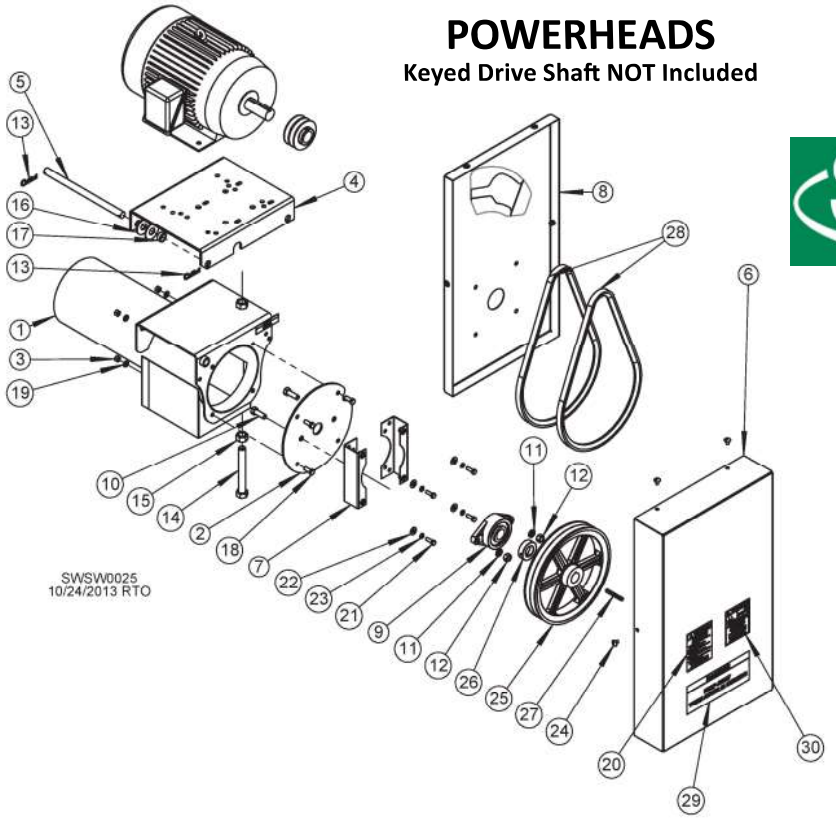

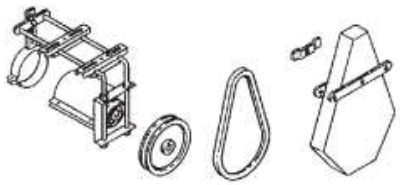

Hutchinson

COMPLETE POWERHEADS

ALL DRIVES INCLUDE:
- Head Plate with Bearing
- Driven Pulley
- Belt(s)
- Belt Guard
- Reduction Unit (if applicable)

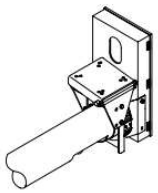

SIZE	DESCRIPTION	MAX HP	QTY. BELTS	DRIVEN PULLEY	DRIVE PULLEY (Not Included)	RPM	LBS.	ITEM #
4"	Standard-Duty		1	8"	3"	656	21	N4108A
	Standard-Duty		1	10"	3"	525	22	N4110A
	Standard-Duty		1	12"	3"	438	26	N4112A
	Standard-Duty		1	14"	3"	375	27	N4114A
6"	Standard-Duty	5	2	12"	3"	438	40	H16010AX
	Standard-Duty	7-1/2	3	12"	3"	438	43	H16020AX
	Standard-Duty	5	2	15"	3"	350	50	H16710AX
	Standard-Duty	7-1/2	3	15"	3"	350	52	H16720AX
	Heavy-Duty	5	3	15"	3"	350	66	H1601HX
	Heavy-Duty	10	2	15"	3"	350	70	H1602HX
	Heavy-Duty	5	2	18.4"	3"	279	72	H1670HX
	Heavy-Duty	10	3	18.4"	3"	279	76	H1671HX
	Heavy-Duty (2 to 1) Chain	10	3	15"	3.5"	204	123	H1602CX
8"	Standard-Duty	5	2	15"	3.4"	443	57	H18010AX
	Standard-Duty	10	3	15"	3.4"	443	60	H18020AX
	Heavy-Duty	5	2	15"	3.4"	443	76	H1801HX
	Heavy-Duty	10	3	15"	3.4"	443	78	H1802HX
	Heavy-Duty	5	2	18.4"	3.4"	323	82	H1870HX
	Heavy-Duty	10	3	18.4"	3.4"	323	84	H1871HX
	Heavy-Duty 3-1 Chain	10	2	12"	5"	243	128	H1801CX
	Heavy-Duty 3-1 Chain	15	3	12"	5"	243	129	H1802CX
	Heavy-Duty 3-1 Chain	10	3	12"	3.5"	170	129	H1802C1X
	Heavy-Duty 3-1 Chain	10	3	15"	3.5"	136	133	H1802C2X
10"	Heavy-Duty	5	2	15"	3"	350	104	H2000HX
	Heavy-Duty	10	3	15"	3"	350	107	H2001HX
	Heavy-Duty	15	4	15.4"	3.4"	386	135	H2002HX
	Heavy-Duty	2	2	18.4"	3"	280	104	H2070AX
	Heavy-Duty	10	3	18.4"	3"	280	114	H2071AX
	Heavy-Duty 3-1 Chain	10	2	12"	5"	243	127	H2000CX
	Heavy-Duty 3-1 Chain	15	3	12"	5"	243	128	H2001CX
	Heavy-Duty 3-1 Chain	10	3	12"	3.5"	170	128	H2001C1X
	Heavy-Duty 3-1 Chain	10	3	15"	3.5"	136	132	H2001C2X
	Heavy-Duty Reducer (4-1)	20	4	7.4"	5"	280	186	H2002HRX
	+ Head Flight Must Be Bushed To 2" For Heavy-Duty Reducer Drives							
12"	Heavy-Duty	5	2	18.4"	3"	280	172	H2270AX
	Heavy-Duty	10	3	18.4"	3"	280	180	H2271AX
	Heavy-Duty 3-1 Chain	10	2	12"	5"	243	126	H2200CX
	Heavy-Duty 3-1 Chain	15	3	12"	5"	243	127	H2201CX
	Heavy-Duty 3-1 Chain	10	3	12"	3.5"	170	127	H2201C1X
	Heavy-Duty 3-1 Chain	10	3	15"	3.5"	136	131	H2201C2X
	Heavy-Duty Reducer (4-1)	20	4	7.4"	5"	280	222	H2202HRX
14"	Heavy-Duty Reducer (4-1)	25-30	4	11"	5"	200	200	H2402HRX

POWERHEAD PARTS BREAK-DOWN

Hutchinson

4" DRIVE

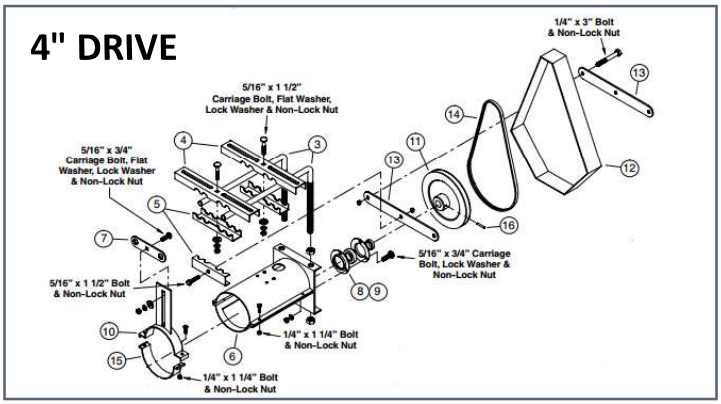

REF #	DESCRIPTION	PART #	REF #	DESCRIPTION	PART #
3	Motor Mount Rods	3000A1	10	Support Strap Weldment	6049A1
4	Straps F/ Motor Mount (top)	5024A1	11	Pulley	*(see pulley pages)*
5	Clips F/ Motor Mount (bottom)	5025A1	12	Belt Guard	4313C
6	Head Plate Weldment	6004A1	13	Belt Guard Clamp	4314C
7	Rod Support Plate	5012A1	14	Belt	*(see belt pages)*
8	Bearing w/ Lock Collar	6390D	15	Half-Band 4" x 2"	5261A1
9	Retainer F/ Bearing	6383C	16	Roll Pin, 5/16" x 2"	6386C

6" STANDARD DRIVE

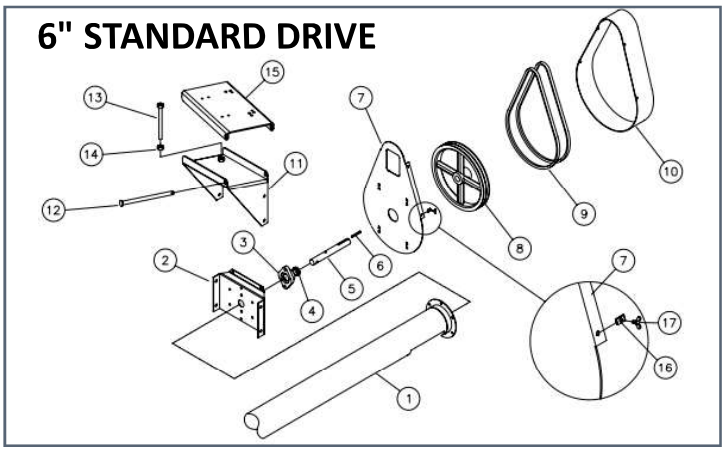

REF #	DESCRIPTION	PART #	REF #	DESCRIPTION	PART #
1	Flanged Housing	---	8	3 Groove Sheave w/ 1" Bore	*(see pulley pages)*
2	Head Plate	1027803	9	Belt, B52 For 12" Sheave	*(see belt pages)*
3	1" Bearing, 2-Bolt w/ Lock Collar	6818D	9	Belt, B57 For 15" Sheave	*(see belt pages)*
4	Lock Collar For Bearing	---	10	Belt Guard-Plastic	1027801
5	Head Stub, 1" dia. x 10"	6332G	11	Motor Mount Support Bkt.	1027777
6	Key, 1/4" Square x 2" Long	4045A1	12	Pin, 5/8" dia. x 9-1/4" long	1016578
6	Key, 1/4" Square x 3" Long (3B)	4046A1	13	Adjusting Rod	1027780
7	Bearing Guard Back	1027782	14	Nut, 5/8" Non-lock	D1170
8	1 Groove Sheave 12" w/ 1" Bore	*(see pulley pages)*	15	Motor Mount Plate	1027779
8	2 Groove Sheave 12" w/ 1" Bore	*(see pulley pages)*	16	Nut, Tinneman 1/4"	1013133
8	2 Groove Sheave 15" w/ 1" Bore	*(see pulley pages)*	17	Bolt, Wing 1/4"	1013131
8	3 Groove Sheave 12" w/ 1" Bore	*(see pulley pages)*			

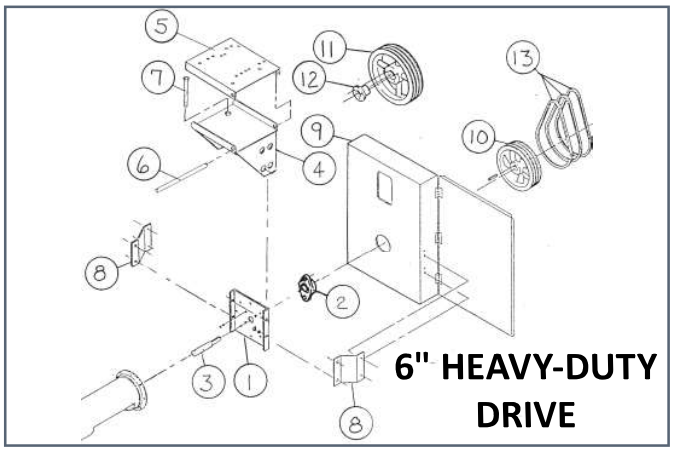

6" HEAVY-DUTY DRIVE

REF #	DESCRIPTION	PART #	REF #	DESCRIPTION	PART #
1	Head Plate for 1" Bore Bearing	1022149	9	Belt Guard For 18.4" Sheave	1009102
1	Head Plate for 1-1/4" Bore Bearing	1022495	10	Sheave, 15" w/ 1" Bore (2B)	*(see pulley pages)*
2	Bearing, 2-Bolt 1" Bore	*(see bearing pages)*	10	Sheave, 15" w/ 1" Bore (3B)	*(see pulley pages)*
2	Bearing, 2-Bolt 1-1/4" Bore	*(see bearing pages)*	10	Sheave, 15" w/ 1-1/4" Bore (2B)	*(see pulley pages)*
3	Head Stub, 1" x 10" Long	6332G	10	Sheave, 15" w/ 1-1/4" Bore (3B)	*(see pulley pages)*
3	Head Stub, 1-1/4" x 10-1/2" Long	8326A	11	Sheave, 18.4" (2B)	*(see pulley pages)*
4	Motor Mount Support	1022139	11	Sheave, 18.4" (3B)	*(see pulley pages)*
5	Motor Mount Plate	1022136	12	Bushing-SK, 1" Bore	*(see bushings page)*
6	Pivot Pin	1018789	12	Bushing -SK, 1-1/4" Bore	*(see bushings page)*
7	Adjusting Rod	1022381	13	Belt, B57 (used with 15")	*(see belt page)*
8	Belt Guard Bracket	1022152	13	Belt, B66 (used with 18.4")	*(see belt page)*
9	Belt Guard For 12" or 15" Sheaves	1009101			

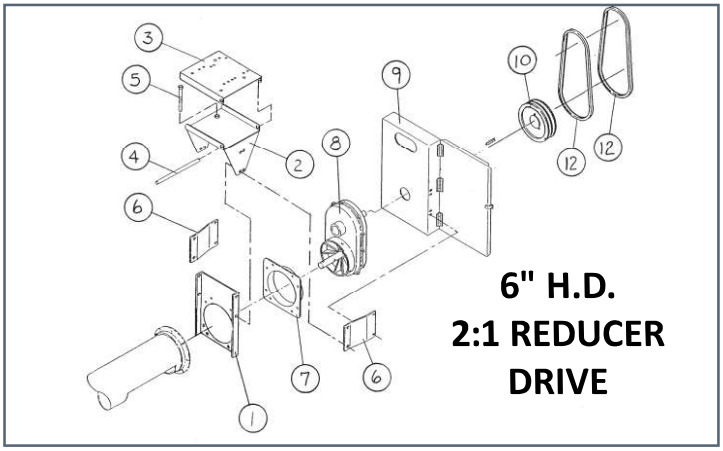

6" H.D. 2:1 REDUCER DRIVE

REF #	DESCRIPTION	PART #	REF #	DESCRIPTION	PART #
1	Head Plate	1022989	7	Adpater Plate	1022159
2	Motor Mount Support	1022141	8	Enclosed Chain Drive (2:1)	1015852
3	Motor Mount Plate	1022136	9	Belt Guard	1009101
4	Pivot Pin	1018789	10	Sheave, 15" (2B)	*(see pulley pages)*
5	Adjusting Rod	1022381	10	Sheave, 15" (3B)	*(see pulley pages)*
6	Belt Guard Bracket	1022157	12	Belt, B60	*(see belt page)*

POWERHEAD PARTS BREAK-DOWN

Hutchinson

REF #	DESCRIPTION	PART #
1	Head Plate f/ 8" Standard Duty	1027804
2	Bearing, 1-1/4" 2-Hole Flange	8325A
3	Lock Collar f/ Bearing	---
4	Head Stub, 1-1/4"dia. x 10-1/2" f/ 2-Groove Sheave	8326A
(4)	Head Stub, 1-1/4"dia. x 11-1/2" f/ 3-Groove Sheave	8319A
5	Key, 1/4" Square x 2" Long	4045A1
(5)	Key, 1/4" Square x 3" Long	4046A1
6	Belt Guard Back	1027782
7	Sheave, 15" w/ 1-1/4" Bore (2B)	*(see pulley pages)*
(7)	Sheave, 15" w/ 1-1/4" Bore (3B)	*(see pulley pages)*

REF #	DESCRIPTION	PART #
8	Belt, B60	*(see belt pages)*
9	Belt Guard-Plastic	1027801
10	Motor Mount Support Bracket	1042262
11	Pin, 5/8"dia. x 13-1/8" Long	1042145
12	Adjusting Rod	1027780
13	Nut, 5/8" Non-Lock	D1170
14	Motor Mount Plate	1042260
15	Nut, 1/4"-20	1013133
16	Bolt, Wing 1/4"-20	1013131
17	Cotter Pin, 1/8" x 1"	33161

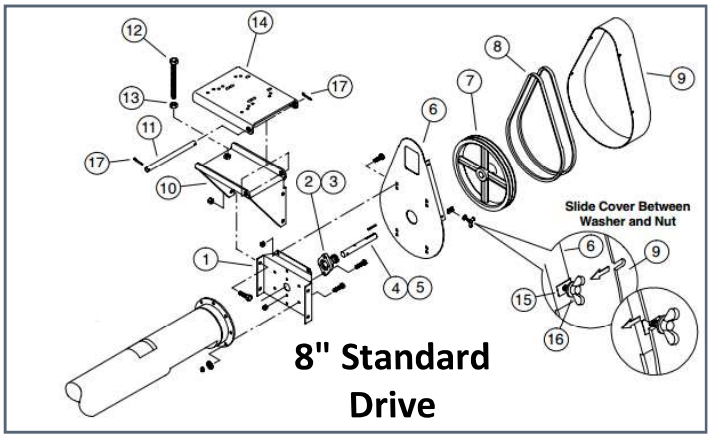

REF #	DESCRIPTION	PART #
1	Head Plate f/ 8" Heavy Duty	1022150
2	Bearing, 1-1/4" 4-Hole Bearing	8370C
3	Head Stub, 1-1/4"dia. x 10-1/2"	8326A
4	Motor Mount Support Bracket	1022139
5	Motor Mount Plate	1022136
6	Pivot Pin	1018789
7	Adjusting Rod	1022381
8	Bracket, Belt Guard	1022154
9	Belt Guard, f/ 12" or 15" Sheaves	1009101
(9)	Belt Guard f/ 18.4" Sheaves	1009102

REF #	DESCRIPTION	PART #
10	Sheave, 15" w/ 1-1/4" Bore (2B)	*(see pulley pages)*
(10)	Sheave, 15" w/ 1-1/4" Bore (3B)	*(see pulley pages)*
11	Sheave, 18.4" w/ 1-1/4" Bore (2B)	*(see pulley pages)*
(11)	Sheave, 18.4" w/ 1-1/4" Bore (3B)	*(see pulley pages)*
12	Bushing, SK 1-1/4" *(used w/ #11)*	*(see bushing pages)*
13	Belt, B60 *(used w/ #10)*	*(see belt pages)*
(13)	Belt, B68 *(used w/ #11)*	*(see belt pages)*
14	Cotter Pin, 3/16" x 1-1/2" Long	3337A1
15	Key, 1/4" Square x 3" Long	4046A1

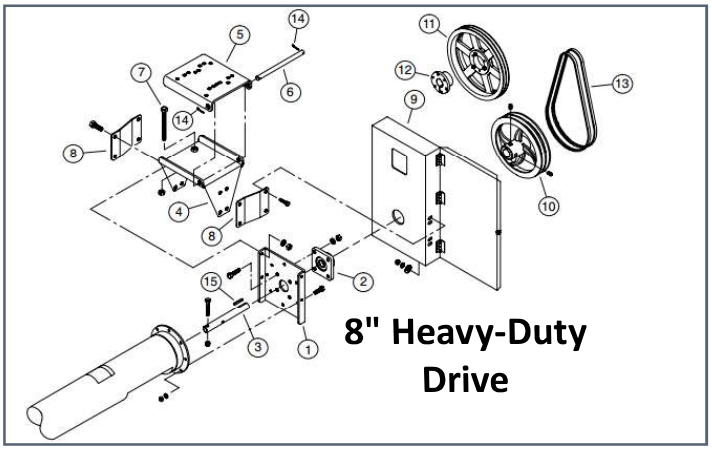

REF #	DESCRIPTION	PART #
1	Head Plate f/ 8" 3:1 Reducer Drive	1022991
2	Motor Mount Support Bracket	1022141
3	Motor Mount Plate	1022136
4	Pivot Rod	1018789
5	Adjusting Rod	1022381
(5)	Adjusting f/ 2-Belt 15" Drives	6676A1
6	Bracket, Belt Guard	1015737
7	Adapter Plate	1015747
8	3:1 Reducer, Enclosed Chain Drive	1015746
9	Belt Guard	1009101

REF #	DESCRIPTION	PART #
10	Sheave, 12" w/ 1-1/4" Bore (2B)	*(see pulley pages)*
(10)	Sheave, 12" w/ 1-1/4" Bore (3B)	*(see pulley pages)*
(10)	Sheave, 15" w/ 1-1/4" Bore (2B)	*(see pulley pages)*
(10)	Sheave, 15" w/ 1-1/4" Bore (3B)	*(see pulley pages)*
11	Key, 1/4" Square x 3" Long	4046A1
12	Belt, B54 f/ 12" Pulley w/ 3.5" Motor Pulley	*(see belt pages)*
(12)	Belt, B57 f/ 12" Pulley w/ 5"Motor Pulley	*(see belt pages)*
(12)	Belt, B60 f/ 15" Pulley w/ 3.5" Motor Pulley	*(see belt pages)*
13	Cotter Pin, 3/16" x 1-1/2" Long	3337A1

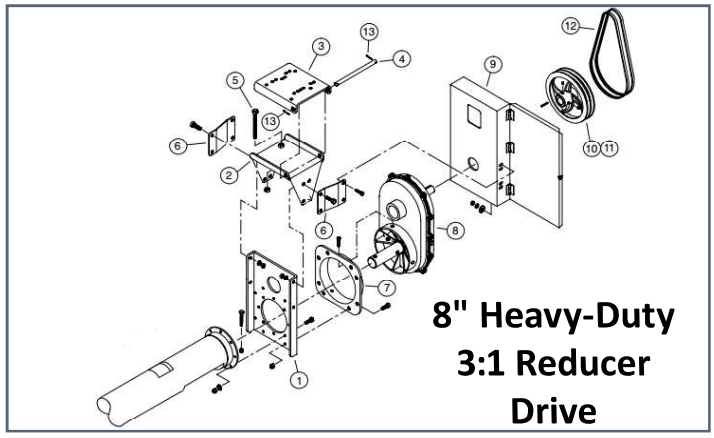

REF #	DESCRIPTION	PART #
1	Aluminum Casting (inside)	1001523
2	Aluminum Casting (outside)	1003044
3	Roller Chain, #80, 36 Pitch	1001847
4	Gasket	1001573
5	Bearing, 1-1/4" Cone	106322
6	Bearing, 1-1/2" Cone	035439
7	Sprocket, 1-1/2" Bore, 27-Tooth	1001841
8	Stub, Output Shaft, 1-1/2"	1015743
9	Stub, Input Shaft, 1-1/4"	1001850
10	Sprocket, 1-1/4" Bore, 9-Tooth	1001840
11	Bolt, 5/16-18 x 1-1/4"	4757-1
12	Lock Washer, 5/16"	33144
13	Nut, 5/16" Lock	33151

REF #	DESCRIPTION	PART #
14	Roll Pin, 5/16" x 2-1/2"	33190
15	Seal, Output Shaft, 1-1/2"	035860
16	Seal, Input Shaft, 1-1/4"	835168
17	Key, 1/4" Square x 1" Long	4020A1
18	Key, 3/8" Square x 1" Long	1002276
19	Drain Plug, 3/8"	458026
20	Bearing Cup, 1-1/4" (Timken# 15245)	106323
21	Bearing Cup, 1-1/2" (Timken# LM29710)	035440
22	Plug, Vented Pipe, 3/8"	1001438
23	Cap	1001851
24	Cap	1001852
25	Roll Pin, 5/16" x 2"	33193
26	Decal, "Fill with Oil" *(not shown)*	1002275

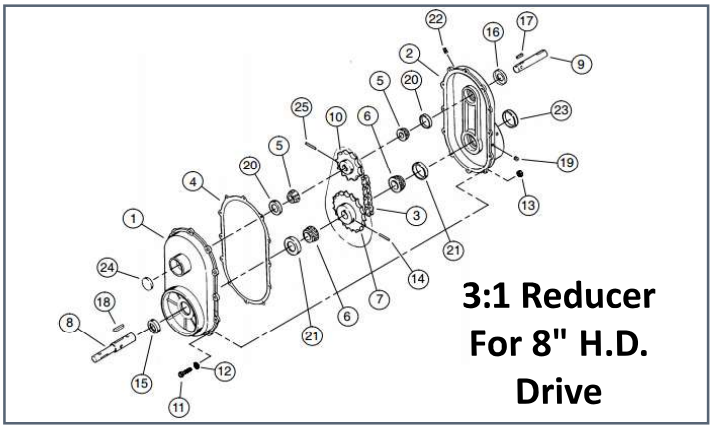

Hutchinson

POWERHEAD PARTS BREAK-DOWN

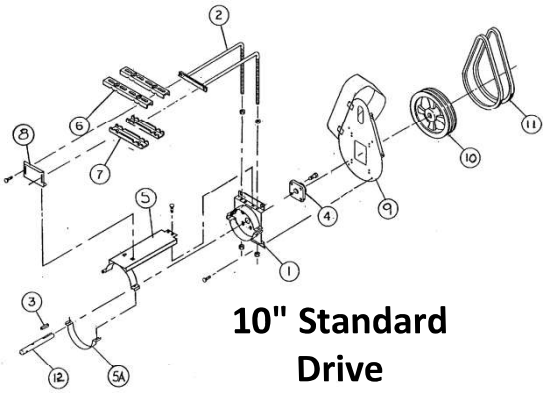

10" Standard Drive

REF #	DESCRIPTION	PART #
1	Motor Mount Plate Weldment	1013379
2	Motor Mount Rod Weldment	1013381
3	Key, Square 3/8" x 3" Long	4073A1
4	Bearing, 1-1/2" 4-Hole	1010A
5	Motor Mount Weldment	1013380
5A	Half Band, 2" Wide (Galv.)	5035A1
6	Top Motor Mount Strap (18")	50435A1
7	Bottom Motor Mount Strap (13")	50434A1

REF #	DESCRIPTION	PART #
8	Back Strap	1013169
9	Belt Guard	1013429
10	Sheave, 15" w/ 1-1/2" Bore (2B)	*(see pulley pages)*
(10)	Sheave, 15" w/ 1-1/2" Bore (3B)	*(see pulley pages)*
11	Belt, B59	*(see belt pages)*
12	Drive Shaft, 1-1/2" x 10-1/2" (2B)	1040A
(12)	Drive Shaft, 1-1/2" x 11-1/2" (3B)	1060D

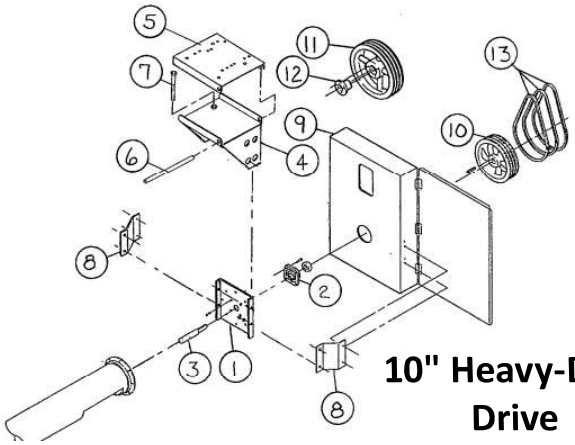

10" Heavy-Duty Drive

REF #	DESCRIPTION	PART #
1	Head Plate	2141C
2	Bearing, 1-1/2" Bore 4-Bolt	1010A
3	Head Stub, 1-1/2" x 10-1/2"	1040A
(3)	Head Stub, 1-1/2" x 11-1/2"	1060D
4	Motor Mount Support	1022139
5	Motor Mount Plate	1022136
6	Pivot Pin	1018789
7	Adjusting Rod	1022381
8	Belt Guard Bracket	1009099
9	Belt Guard	1009102
10	Sheave, 15" w/ 1-1/2" Bore (2B)	*(see pulley pages)*

REF #	DESCRIPTION	PART #	PRICE
(10)	Sheave, 15" w/ 1-1/2" Bore (3B)	*(see pulley pages)*	
11	Sheave, 15.4" w/ 1-1/2" Bore (4B)	*(see pulley pages)*	
(11)	Sheave, 18.4" w/ 1-1/2" Bore (2B)	*(see pulley pages)*	
(11)	Sheave, 18.4" w/ 1-1/2" Bore (3B)	*(see pulley pages)*	
12	Bushing, SF 1-1/2" f/ 15.4" (4B)	*(see pulley pages)*	
(12)	Bushing, SK 1-1/2" f/ 18.4"	*(see pulley pages)*	
13	Belt, B62 f/ 15" (2B)	*(see belt pages)*	
(13)	Belt, B64 f/ 15" (3B)	*(see belt pages)*	
(13)	Belt, B66 f/ 15.4" (4B)	*(see belt pages)*	
(13)	Belt, B68 f/ 18.4" (2B)	*(see belt pages)*	
(13)	Belt, B71 f/ (18.4" (3B)	*(see belt pages)*	

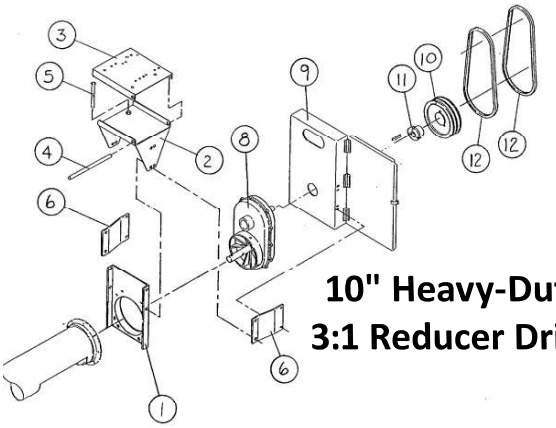

10" Heavy-Duty 3:1 Reducer Drive

REF #	DESCRIPTION	PART #
1	Head Plate	1022993
2	Motor Mount Support	1022141
3	Motor Mount Plate	1022136
4	Pivot Pin	1018789
5	Adjusting Rod	1022381
(5)	Adjusting Rod f/ 15" (2B) only	6676A1
6	Belt Guard Bracket	1015737
8	Enchlosed Chain Drive, 3:1	1015745
9	Belt Guard	1009101

REF #	DESCRIPTION	PART #	PRICE
10	Sheave, 12" (2B)	*(see pulley pages)*	
(10)	Sheave, 12" (3B)	*(see pulley pages)*	
(10)	Sheave, 15" (2B)	*(see pulley pages)*	
(10)	Sheave, 15" (3B)	*(see pulley pages)*	
11	Bushing, SK 1-1/2"	*(see bushing pages)*	
12	Belt, B54 f/ 12" w/ 3.5" Motor Sheave	*(see belt pages)*	
(12)	Belt, B57 f/ 12" w/ 5" Motor Sheave	*(see belt pages)*	
(12)	Belt, B60 f/ 15" w/ 3.5" Motor Sheave	*(see belt pages)*	

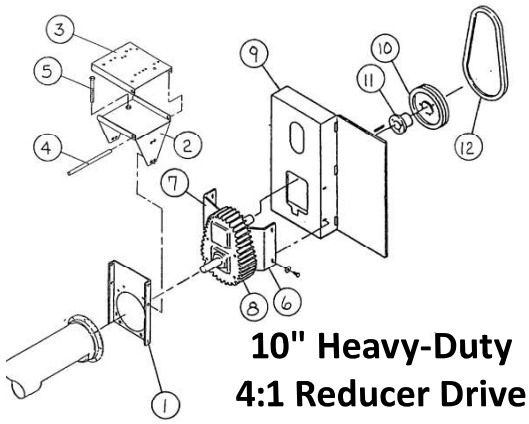

10" Heavy-Duty 4:1 Reducer Drive

REF #	DESCRIPTION	PART #
1	Head Plate	1027735
2	Motor Mount Support	1022143
3	Motor Mount Plate	1022137
4	Pivot Plate	1018789
5	Adjusting Rod	1022381
6	Belt Guard Bracket	1014407
7	Belt Guard Bracket	1014406

REF #	DESCRIPTION	PART #
8	Enclosed Gear Drive, 4:1	1025519-2
9	Belt Guard	1002042
10	Sheave, 7.4" (3B)	*(see pulley pages)*
(10)	Sheave, 7.4" (4B)	*(see pulley pages)*
11	Bushing, SK 1-1/2"	*(see bushing pages)*
12	Belt, B48	*(see belt pages)*

POWERHEAD PARTS BREAK-DOWN

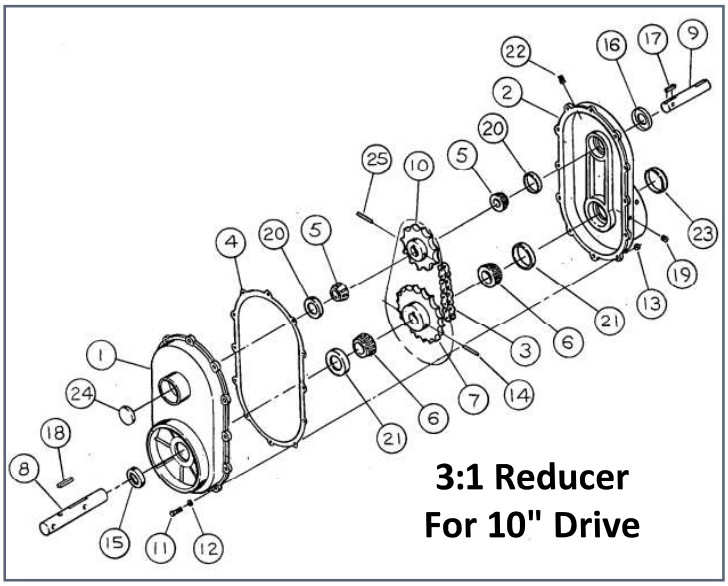

REF #	DESCRIPTION	PART #	REF #	DESCRIPTION	PART #
1	Aluminum Casting (inside)	1001523	14	5/16" x 2-1/2" Roll Pin	33190
2	Aluminum Casting (outside)	1003044	15	Output Shaft Seal - 1-1/2"	035860
3	#80 Roller Chain-36 Pitch	1001847	16	Input Shaft Seal - 1-1/4"	835168
4	Gasket	1001573	17	Key, Square 1/4" x 1"	4020A1
5	Bearing Cone, 1-1/4" (Timken # 15123)	106322	18	Key, Square 3/8" x 1"	1002276
6	Bearing Cone, 1-1/2" (Timken # LM29749)	035439	19	Drain Plug, 3/8"	458026
7	Sprocket, 1-1/2" Bore-27 Tooth	1001841	20	Bearing Cup, 1-1/4" (Timken # 15245)	106323
8	Stub Output Shaft - 1-1/2"	1015742	21	Bearing Cup, 1-1/2" (Timken # LM29710)	035440
9	Stub Input Shaft - 1-1/4"	1001850	22	3/8" Vent Plug	1001438
10	Sprocket, 1-1/4" Bore-9 Tooth	1001840	23	Cap	1001851
11	5/16" x 1-1/4" HHCS	4727-1	24	Cap	1001852
12	5/16" Lock Washer	33144	25	Roll Pin, 5/16" x 2"	33193
13	5/16" Lock Nut	33151	26	Decal, "Fill with Oil" (not shown)	1002275

4:1 Reducer For 10" Drive

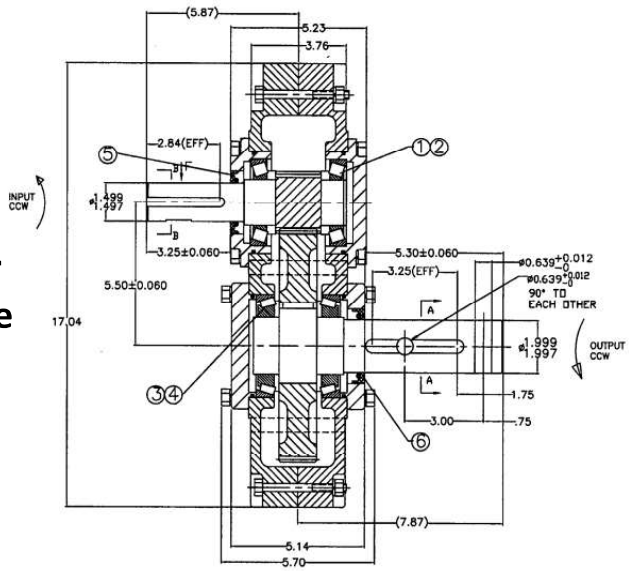

REF #	DESCRIPTION	PART #
1	Bearing Cone 25590	1026473
2	Bearing Cup 25520	1021344
3	Bearing Cone 390A	1026474
4	Bearing Cup 394A	1026475
5	Seal f/ 1.50" Input Shaft	1026476
6	Seal f/ 2.00" Output Shaft	1026477

Moving A World Of Grain

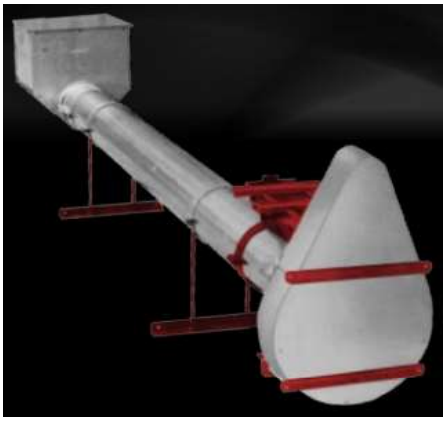

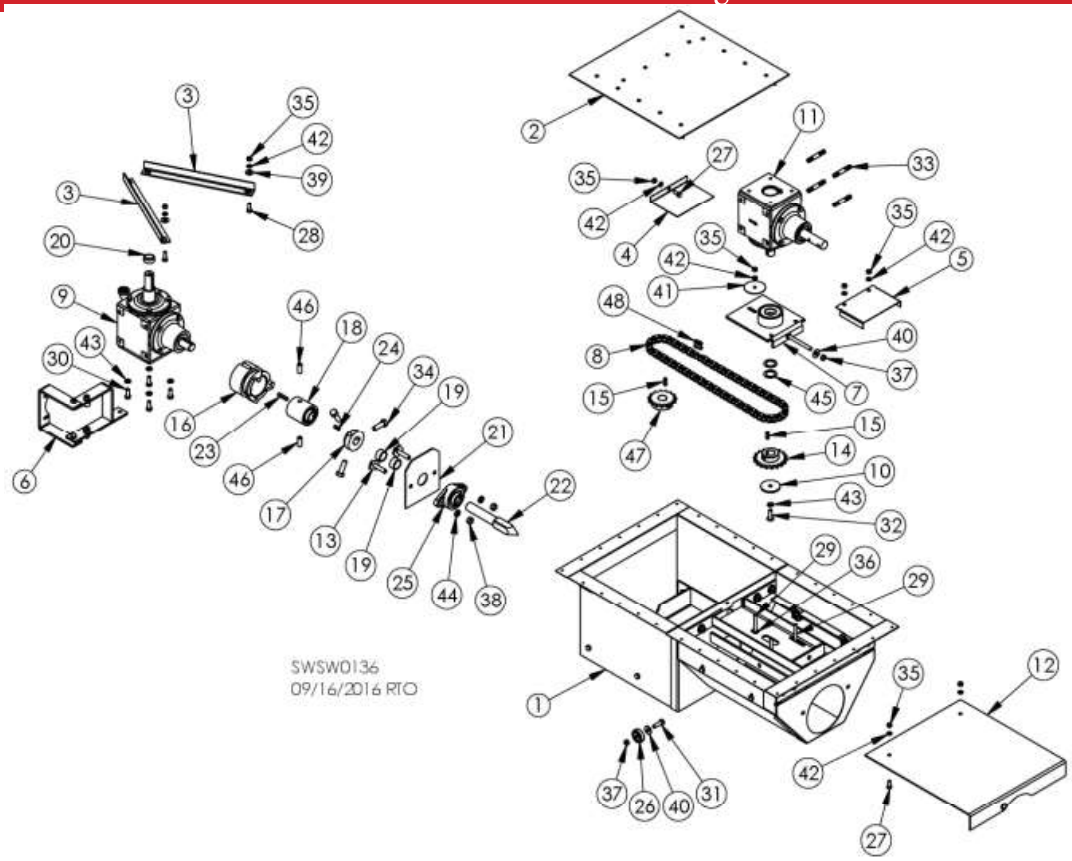

6" SWEEPWAY CENTER SUMP PARTS LIST

REF #	DESCRIPTION	QTY	PART #	REF #	DESCRIPTION	QTY	PART #
1	Center sump shell	1	E5300	25	1” flange bearing	1	J0003
2	Center sump cover	1	E5306	26	Roller bearing 1-1/2”, 3/8” bore	6	J0045
3	Center sump brace	2	E5308	27	Bolt, 5/16 - 18 x 3/4”	3	J0520
4	Chain cover	1	E5309	28	Screw, 5/16 - 18 x 1”	2	J0527
5	Gearbox support cover	1	E5312	29	Carriage bolt, 5/16 - 18 x 2-1/2”	3	J0589
6	Clutch shifter arm assembly	1	E5313	30	Bolt, 3/8 - 16 x 1”	4	J0606
7	Top g/b bearing sprt slide plate w/ bearings	1	E5317	31	Bolt, 3/8 - 16 x 1-1/4”	2	J0616
8	#50 chain, 73 links & 1 connector link	1	E5319	32	Bolt, 3/8 - 16 x 1-1/4”, zinc plated	1	J06161
9	Lower gearbox	1	E5320	33	Stud bolt, 7/16 - 14 x 2-3/4”	4	J07211
10	Spacer washer, 3/8” ID, 2-1/4” OD	1	E5324	34	Bolt, 1-1/2 x 1/2”	3	J0730
11	Top gearbox	1	E5325	35	Hex nut, 5/16” - 18	8	J1002
12	Slide gate	1	---	36	Flat nut, 5/16” - 18	1	J1009
13	Bolt, 7/16 - 14 x 2”	2	E5570	37	Lock nut, 3/8” - 16	7	J1025
14	Sprocket, 1” bore, 50B18 w/ Set Screws	1	E58371	38	Hex nut, 7/16” - 14	2	J1035
15	Key, 1/4” sq. x 1”	2	E5915	39	Flat washer, 5/16”	2	J1111
16	Three-tooth engaging clutch	1	E60011	40	Flat washer, 3/8”	7	J1117
17	3-bolt clutch base	1	E6002	41	Washer, 2-1/2” OD, 3/8” ID, 14ga	1	J1140
18	Clutch base w/ set & pilot bearing, 2 bolt	1	E60031	42	Split lock washer, 5/16”	8	J1200
19	Clutch spacer, 5/8” long	2	E60041	43	Split lock washer, 3/8”	5	J1205
20	Clutch spacer, 7/16” long	1	E60042	44	Split lock washer, 7/16”	2	J1210
21	Mounting plate	1	E6005	45	Machine bushing, 1”, 18ga	2	J1266
22	Square-end shaft	1	E6006	46	Allen-head setscrew, 1/2 x 1-1/4”	2	J1390
23	Key, 1/4” x 1-1/2”	1	E9007	47	Sprocket, 50B15H, 1” bore w/ keyway	1	J1665
24	Key, 1/4" x 3/4”	1	G7508	48	Chain connector link, #50	1	J1760

8" SWEEPWAY CENTER SUMP PARTS LIST

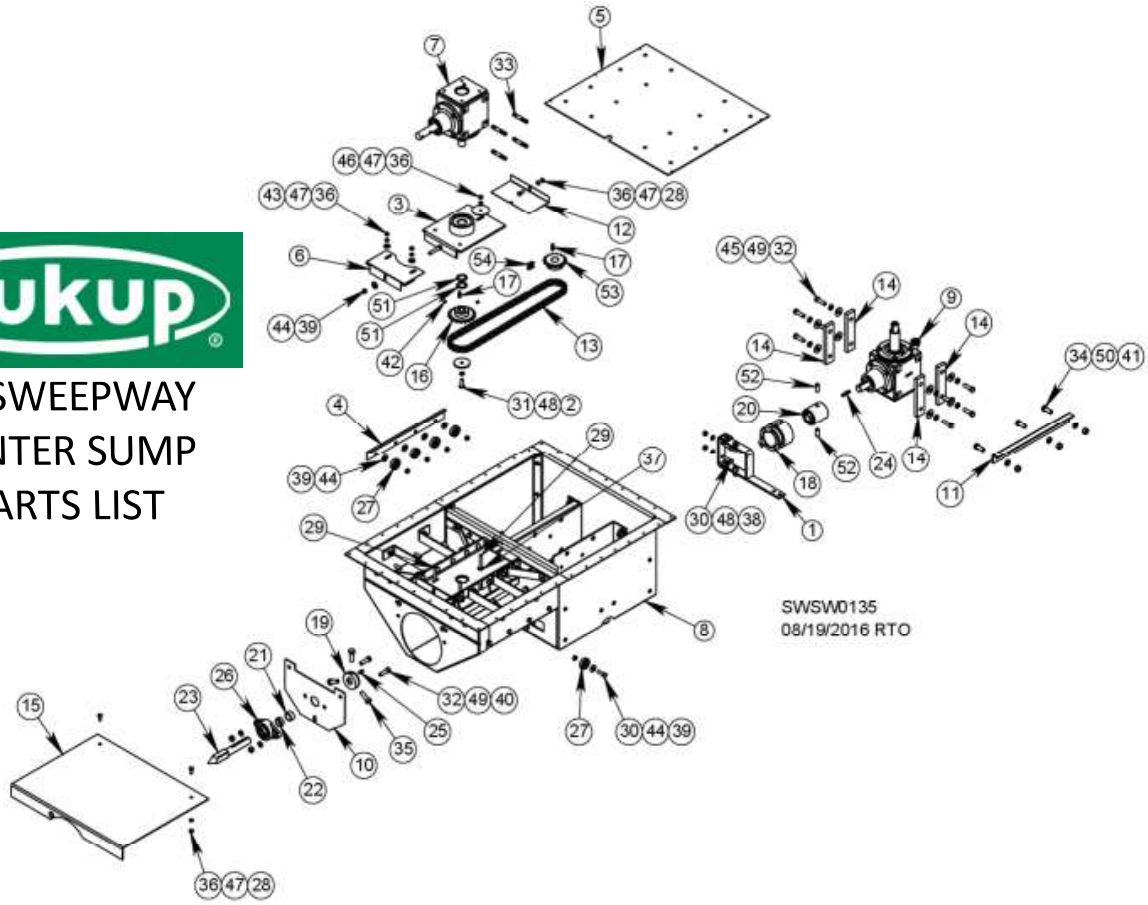

REF #	DESCRIPTION	QTY	PART #	REF #	DESCRIPTION	QTY	PART #
1	Clutch shifter arm assembly	1	E53132	28	Bolt, 5/16 - 18 x 3/4”	3	J0520
2	Spacer washer, 3/8” ID, 2-1/4” OD	1	E5324	29	Carriage bolt, 5/16 - 18 x 2-1/2”	3	J0589
3	Weld support plate w/ snap ring, 10"	1	E5339	30	Bolt, 3/8 - 16 x 1-1/4”	4	J0616
4	Side gate rail	2	---	31	Bolt, 3/8 - 16 x 1-1/4”, zinc plated	1	J06161
5	Sump cover	1	E5354	32	Screw, 7/16 - 14 x 1-1/2”	10	J0710
6	Gearbox support cover	1	E5357	33	Stud bolt, 7/16 - 14 x 2-3/4”	4	J07211
7	Top gearbox	1	E5374	34	Screw, 1/2 - 13 x 1-1/4”	3	J0728
8	Center sump shell	1	---	35	Bolt, 1-1/2 x 1/2”	3	J0730
9	Lower gearbox	1	E5378	36	Hex nut, 5/16” - 18	6	J1002
10	Mounting plate	1	E53871	37	Flat nut, 5/16” - 18	1	J1009
11	Gearbox support angle brace	1	E53874	38	Hex nut, 3/8” - 16	2	J1020
12	Chain cover	1	E53875	39	Lock nut, 3/8” - 16	11	J1025
13	#50 chain, 75 links	1	E53876	40	Hex nut, 7/16” - 14	2	J1035
14	Lower gearbox spacer bar	4	E53877	41	Hex nut, 1/2" - 13	3	J1040
15	Slide gate	1	---	42	Setscrew, 5/16” - 18	2	J1080
16	Sprocket, 50B18, 1” bore w/ setscrews	1	E58371	43	Flat washer, 5/16”	2	J1111
17	Key, 1/4 sq. x 1"	2	E5915	44	Flat washer, 3/8”	11	J1117
18	Three-tooth engaging clutch	1	E60011	45	Flat washer, 7/16"	8	J1120
19	3-bolt clutch base	1	E6002	46	Washer, 2-1/2” OD, 3/8” ID, 14ga	1	J1140
20	Clutch base w/ set & pilot bearing, 2 bolt	1	E60031	47	Split lock washer, 5/16”	6	J1200
21	Clutch spacer, 5/8” long	1	E60041	48	Split lock washer, 3/8”	3	J1205
22	Clutch spacer, 7/16” long	1	E60042	49	Split lock washer, 7/16”	10	J1210
23	Square-end shaft	1	E6006	50	Lock washer, 1/2"	3	J1215
24	Key, 1/4 x 1-1/2”	1	E9007	51	Machine bushing, 1”, 18ga	2	J1266
25	Key, 1/4" x 3/4”	1	G7508	52	Allen-head setscrew, 1/2 x 1-1/4”	2	J1390
26	1” flange bearing	1	J0003	53	Sprocket, 50B15H, 1” bore w/ keyway	1	J1665
27	Roller bearing 1-1/2”, 3/8” bore	10	J0045	54	#50 chain connector link	1	J1760

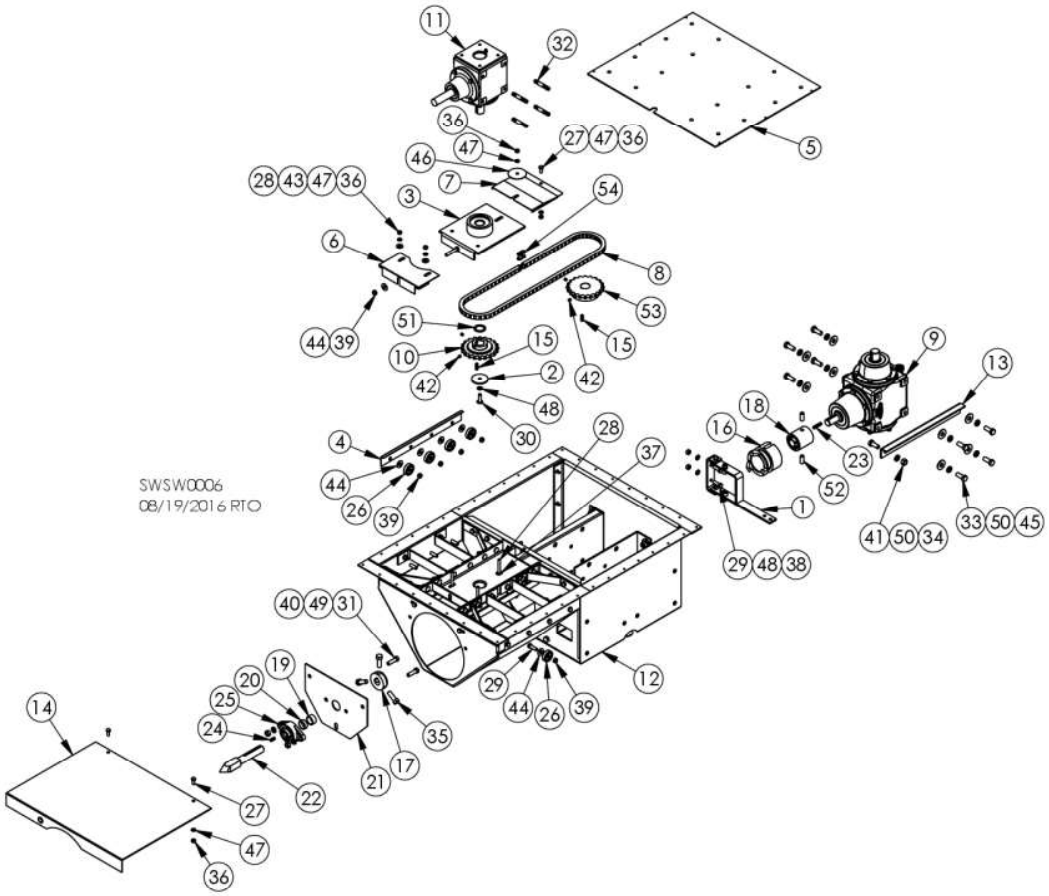

10" SWEEPWAY CENTER SUMP PARTS LIST

REF #	DESCRIPTION	QTY	PART #	REF #	DESCRIPTION	QTY	PART #
1	Clutch shifter arm assembly	1	E53132	28	Carriage bolt, 5/16 - 18 x 2-1/2”	3	J0589
2	Spacer washer, 3/8” ID, 2-1/4” OD	1	E5324	29	Bolt, 3/8 - 16 x 1-1/4”	4	J0616
3	Weld support plate w/ snap ring, 10"	1	E5339	30	Bolt, 3/8 - 16 x 1-1/4”, zinc plated	1	J06161
4	Side gate rail	2	---	31	Screw, 7/16 - 14 x 1-1/2”	2	J0710
6	Gearbox support cover	1	E5357	33	Screw, 1/2 - 20 x 1-1/4”	8	J0724
7	Chain cover	1	E5358	34	Screw, 1/2 - 13 x 1-1/4”	1	J0728
8	#60 chain, 73 links	1	E5359	35	Bolt, 1-1/2 x 1/2”	3	J0730
9	Lower gearbox	1	E5360	36	Hex nut, 5/16” - 18	6	J1002
10	Sprocket, 60B20, 1.1811” bore	1	E53731	37	Flat nut, 5/16” - 18	1	J1009
11	Top gearbox	1	E5375	38	Hex nut, 3/8” - 16	2	J1020
12	Center sump shell	1	E5354	39	Lock nut, 3/8” - 16	11	J1025
13	Gearbox support angle brace	1	E53874	40	Hex nut, 7/16” - 14	2	J1035
14	Slide gate	1	---	41	Hex nut, 1/2" - 13	1	J1040
15	Key, 1/4 sq. x 1"	2	E5915	42	Setscrew, 5/16” - 18	4	J1080
16	Three-tooth engaging clutch	1	E60011	43	Flat washer, 5/16”	2	J1111
17	3-bolt clutch base	1	---	44	Flat washer, 3/8”	11	J1117
18	Clutch base w/ set & pilot bearing, 2 bolt	1	E60031	45	Flat washer, 1/2”	8	J1125
19	Clutch spacer, 5/8” long	1	E60041	46	Washer, 2-1/2” OD, 3/8” ID, 14ga	1	J1140
20	Clutch spacer, 7/16” long	1	E60042	47	Split lock washer, 5/16”	6	J1200
21	Mounting plate	1	E60051	48	Split lock washer, 3/8”	3	J1205
22	Square-end shaft	1	E6018	49	Split lock washer, 7/16”	2	J1210
23	Key, 1/4 x 1-1/2”	1	E9007	50	Lock washer, 1/2"	9	J1215
24	Key, 1/4" x 3/4”	1	G7508	51	Machine bushing, 30mm ID x 4mm OD	1	J1268
25	1” flange bearing	1	J0003	52	Allen-head setscrew, 1/2 x 1-1/4”	2	J1390
26	Roller bearing 1-1/2”, 3/8” bore	10	J0045	53	Sprocket, 60B20, 1-1/4” bore	1	J1695
27	Bolt, 5/16 - 18 x 3/4”	3	J0520	54	#60 chain connector link	1	J1775

6" & 8" HUTCHINSON STANDARD POWERSWEEP CENTER WELL COMPONENTS

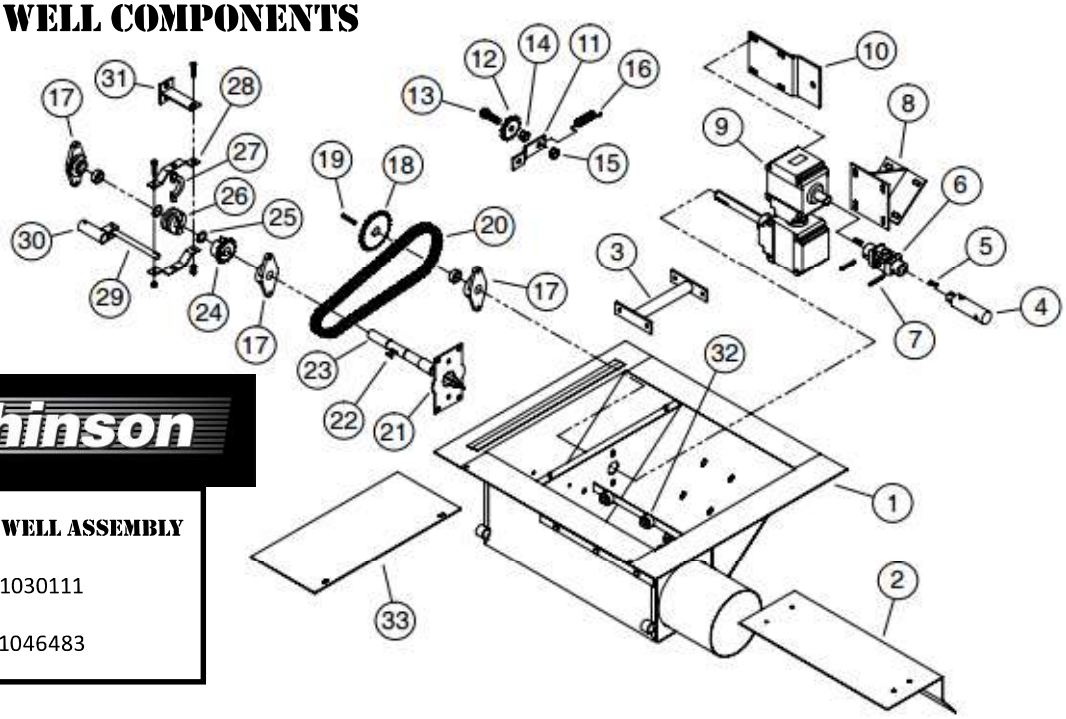

Hutchinson

COMPLETE POWER WELL ASSEMBLY

6" = Part # 1030111

8" = Part # 1046483

REF #	PART #	DESCRIPTION	REF #	PART #	DESCRIPTION
			16	6823P	Spring, 5" Long f/ Idler Sprocket
(1)	1029970	Power Well Weldment f/ 8" Models	17	6818D	Bearing, 2-Hole Flange, 1" Bore
2	1030086	Slide Gate f/ 8" Models	18	6331G	Sprocket, 22 tooth, #50 1" Bore
3	6095A1	Inside Mount Brkt. f/ Gearbox, F/6" & 8"	19	8371C	Key, 1/4" sq. x 1-1/2" Long
4	1016644	Stub f/ U-Joint, f/ 6" Models	20	1015291	Chain, #50, 44 Pitch f/ 8"
(4)	1016684	Stub f/ U-Joint, f/ 8" Models	21	1030004	Plate, Bearing Mount
5	4020A1	Square Key, 1/4" x 1" Long	22	8826G	Key, 1/4" sq. x 1-1/4" Long
6	1013677	Universal Joint, 1" to 1" (5" Long)	23	1030005	Shaft, Clutch (1" dia. x 14-5/8")
7	6386C	Roll Pin, 5/16" x 2" Long	24	6830P	Sprocket, f/ Clutch, 13 tooth #50 w/ 1" Bore (f/ 6" & 8")
8	1014766	Gearbox Mounting Bracket f/ 6" & 8"	25	420015	Retaining Ring
9	1015211-4	Double Gearbox Assembly	26	6812P	Clutch, Sliding Jaw
10	1016619	Shield Bracket f/ Gearbox, 6" Models	27	6828F	Clutch Yoke
(10)	1016617	Shield Bracket f/ Gearbox, 8" Models	28	6828P	Bracket, Clutch Yoke
11	1005850	Arm, Idler Sprocket	29	6827P	Rod, Clutch Control (5/8" dia. x 6-5/8" Long)
12	6821P	Sprocket, 13 tooth, #50 x 5/8" Bore	30	61641	Clevis, Clutch Control
13	33244	Bolt, 5/8" x 2"	31	6826P	Clutch Bracket Weldment
14	D1170	Nut, 5/8-11 Non-Lock	32	51867	Roller, 1-1/2" O.D. Nylon
15	1005111	Nut, 5/8-11 Side Depress	33	553411	Door, Drive Cover

SWEEP FLIGHT & SHIELD COMPONENTS

Hutchinson

6" & 8" HUTCHINSON STANDARD POWERSWEEP

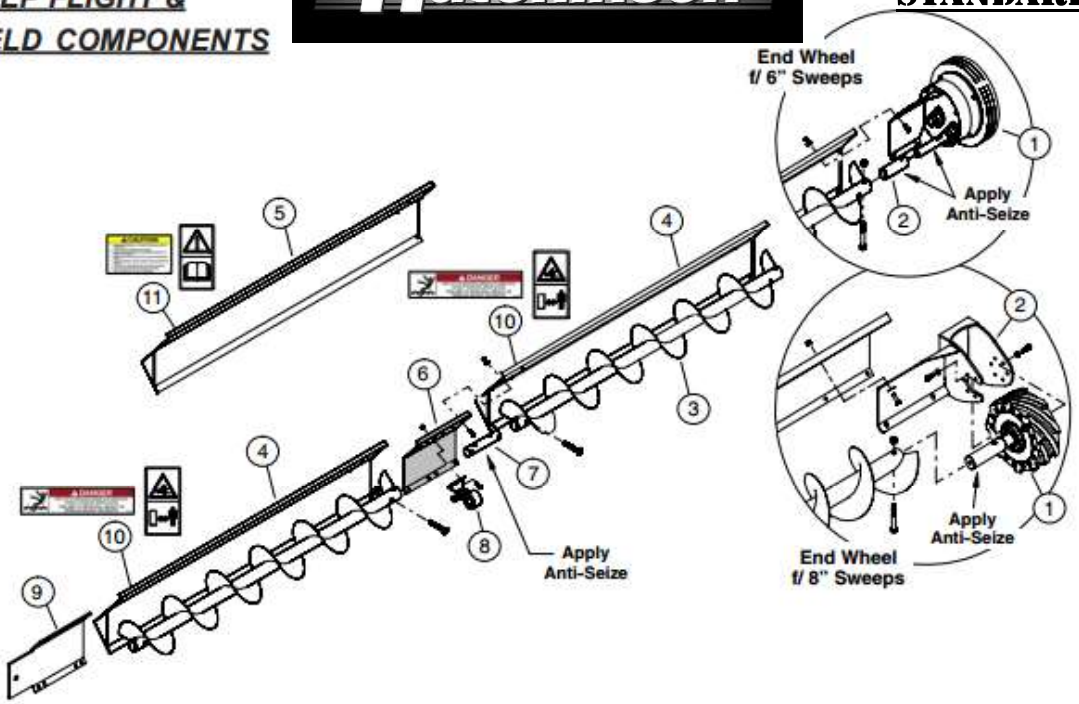

6" COMPONENTS			8" COMPONENTS		
REF #	PART #	DESCRIPTION	REF #	PART #	DESCRIPTION
1	1030225	Enclosed Sweep Wheel Assembly	1	1045372	Sweep Drive Wheel f/ 8"
2	1015481	Bushing, Sweep Wheel Flight	2	1045077	Bracket, Drive Wheel Mount
3	1016749	Flight, 4'-4" (1.32 m) long	3	1015708	Flight, 4'-4" (1.32 *m*) long
(3)	1017692	Flight, 5'-6" (1.68 m) long	(3)	1017705	Flight, 5'-6" (1.68 *m*) long
(3)	5262H	Flight, 5'-10" (1.78 m) long	(3)	1017607	Flight, 7'-0" (2.13 *m*) long
(3)	1017696	Flight, 7'-0" (2.13 m) long	(3)	1017709	Flight, 8'-6" (2.59 *m*) long
(3)	1016750	7'-4" (2.24 m) long	(3)	5324H	Flight, 5'-10" (1.78 *m*) long
(3)	1017701	8'-6" (2.59) long	(3)	1016622	Flight, 7'-4" (2.24 *m*) long
(3)	5265H	8'-10" (2.69 m) long	(3)	5245H	Flight, 8'-10" (2.69 *m*) long
4	1030195	Flight Shield, 53 1/8" (16.16 *m*)	4	1030060	Flight Shield, 53-1/8" (16.16 *m*)
(4)	1030196	Flight Shield, 67 1/8" (20.42 *m*)	(4)	1030061	Flight Shield, 67-1/8" (20.42 *m*)
(4)	1030197	Flight Shield, 71 1/8" (21.64 *m*)	(4)	1030062	Flight Shield, 71-1/8" (21.64 *m*)
(4)	1030198	Flight Shield, 85 1/8" (25.91 *m*)	(4)	1030063	Flight Shield, 85-1/8" (25.91 *m*)
(4)	1030200	Flight Shield, 89 1/8" (27.13 *m*)	(4)	1030065	Flight Shield, 89-1/8" (27.13 *m*)
(4)	1030201	Flight Shield, 103 1/8" (31.40 *m*)	(4)	1030066	Flight Shield, 103-1/8" (31.40 *m*)
(4)	1030202	Flight Shield, 107 1/8" (32.62 *m*)	(4)	1030103	Flight Shield, 107-1/8" (32.62 *m*)
5	1030199	Flight Shield, 86 1/4" (26.22 *m*)	5	1030064	Flight Shield, 86-1/4" (26.22 *m*)
6	1030222	Plate, Shield Splice	6	1030045	Plate, Shield Splice
7	8393C	Stub, 1-1/4" x 11-1/2" (293 *mm*)	7	1045D	Stub, 1-1/2" x 11-1/2" (293 *mm*)
8	1030232	Shield Bearing Assembly	8	1030096	Shield Bearing Assembly
--	8379C	Bushing, 1-1/4" I.D. Bronze	--	1051D	Bushing, 1-1/2" I.D. Bronze
9	1030221	Plate, Shield To Gearbox	9	1030042	Plate, Shield To Gearbox
10	1002304	Decal, Danger: Keep Out Of Bin	10	1002304	Decal, Danger: Keep Out Of Bin
(10)	1025077	CE Decal, Danger: Keep Away	(10)	1025077	CE Decal, Danger: Keep Away
(11)	1025080	CE Decal, Read Manual	(11)	1025080	CE Decal, Read Manual

6" & 8" HUTCHINSON STANDARD POWERSWEEP

UNLOADING TUBE COMPONENTS

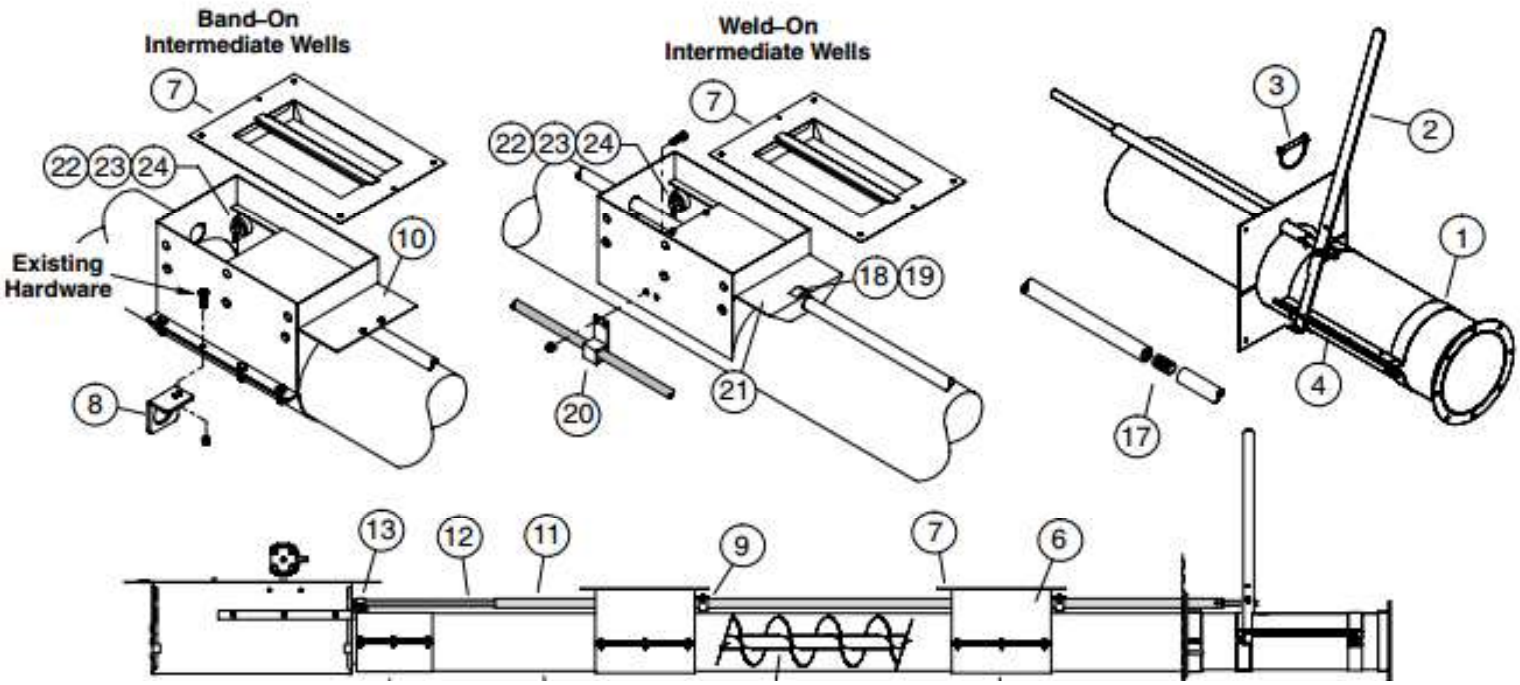

All Items Shown Are Used With Both 6" & 8" Models Unless Otherwise Indicated

REF #	PART #	DESCRIPTION	REF #	PART #	DESCRIPTION
1	5048A1	Half Band, 6" Galv. x 2" Wide	(11)	1016965	15'-6" (4.72 *m*) long
(1)	5033A1	Half Band, 8" Galv. x 2" Wide	(11)	1016730	16'-5" (5.00 *m*) long
2	1022410	Control Lever Handle	(11)	1016731	19'-0" (5.79 *m*) long
3	1016747	Lynch Pin	(11)	1016732	21'-2" (6.45 *m*) long
4	1022413	Bracket, Pull Bar	12	--	Control Rod, 7/8" O.D. f/ Center Well Gate
5	1014964	6" Back Band Weldment	(12)	52155	7'-0" (2.13 *m*) long
(5)	8806D	8" Back Band Weldment	(12)	52156	8'-6" (2.59 *m*) long
6	1014963	6" Intermediate Bin Well Wldmnt w/ Rollers	(12)	52157	10'-0" (3.05 *m*) long
(6)	1014752	8" Intermediate Bin Well Wldmnt w/ Rollers	(12)	52158	11'-6" (3.51 *m*) long
7	1015010	6" Top Flange	(12)	52159	13'-0" (3.96 *m*) long
(7)	1014743	8" Top Flange	(12)	52160	14'-6" (4.42 *m*) long
8	1037453	Clutch Bracket (8" Band-On Only)	(12)	52161	16'-0" (4.88 *m*) long
9	552406	Clamp f/ Intermediate Well Gate	(12)	54393	16'-6" (5.03 *m*) long
10	1015006	6" Intermediate Well Gate	(12)	52162	17'-6" (5.33 *m*) long
(10)	1014757	8" Intermediate Well Gate	(12)	52163	19'-0" (5.79 *m*) long
11	---	Control Rod, 1-3/8" O.D. f/ Int. Well Gate	(12)	54394	19'-6" (5.94 *m*) long
(11)	1016728	5'-9" (1.75 *m*) long	(12)	52164	20'-6" (6.25 *m*) long
(11)	1016960	6'-6" (1.98 *m*) long	(12)	53845	21'-0" (6.40 *m*) long
(11)	1016961	8'-5" (2.57 *m*) long	(12)	52165	1'-0" (305 *mm*) long extension
(11)	1016729	10'-0" (3.05 *m*) long	(12)	52166	2'-6" (762 *mm*) long extension
(11)	1016962	11'-0" (3.35 *m*) long	(12)	52167	5'-6" (1.68 *m*) long extension
(11)	1016963	12'-0" (3.66 *m*) long	*Extensions Are Used With The 21'-0" Control Rod		
(11)	1016964	14'-5" (4.39 *m*) long	Part # 53845 And Require Connector 41089		

Hutchinson

10" HUTCHINSON STANDARD POWERSWEEP CENTER WELL COMPONENTS

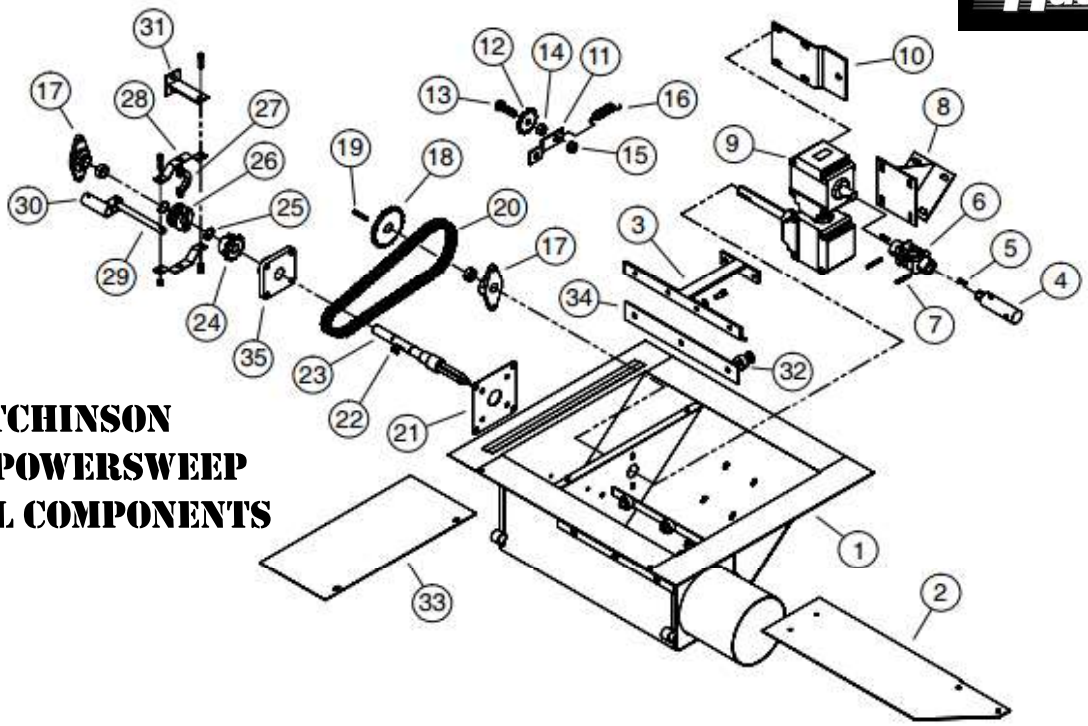

REF #	PART #	DESCRIPTION
1	1030252	Center Weldment (10")
2	1030257	Slide Gate f/ Center Well
3	1023933	Bracket, Lateral Gearbox Support
4	1016684	Stub f/ Sweep Flight
5	4020A1	Key, 1/4" Sq. x 1" Long
6	1013677	Universal Joint f/ Center Well
7	6386C	Roll Pin, 5/16" x 1" Long
8	1015014	Bracekt, Gearbox Weldment
9	1015211-4	Double Gearbox Assembly
10	1016617	Shield Bracket f/ Gearbox
11	1005850	Arm, Idler Sprocket
12	6821P	Sprocket, Idler (#50 x 5/8" Bore)
13	33244	Bolt, 5/18-11 x 2" HHCS
14	D1170	Nut, 5/8-11 Non-Lock
15	1005111	Nut, 5/8-11 Side Depress Lock
16	6823P	Spring, 5" Long f/ Idler Sprocket
17	6818D	Bearing, 2-Hole Flange, 1" Bore
18	6331G	Sprocket, 22-Tooth, #50 x 1" Bore

REF #	PART #	DESCRIPTION
19	8371C	Key, 1/4" Sq. x 1-1/2" Long
20	3210A1	Chain, #50 Roller x 48 Pitch
21	1030254	Plate, Bearing Mount
22	8826G	Key, 1/4" x 1-1/4" Woodruff
23	1030255	Shaft, Clutch, 1" dia. x 14-3/4" Long
24	1018151	Sprocket, Female Clutch, #50 x 18-Tooth
25	420015	Truac Key Ring, #5160-90
26	6812P	Jaw, Male Clutch Sliding
27	6828F	Yoke f/ Clutch
28	6828P	Bracket f/ Clutch Yoke
29	6827P	Rod, Clutch Control, 5/8" dia. x 6-5/8" Long
30	61641	Clevis, Clutch Control
31	6826P	Clutch Bracket Weldment
32	51867	Roller, Plastic (1-1/2" OD x 1/2" ID)
33	553411	Cover Door f/ Center Well
34	1023940	Guide, Plastic Slide
35	8370C	Bearing, 4-Hole Flange w/ 1" Bore

Hutchinson

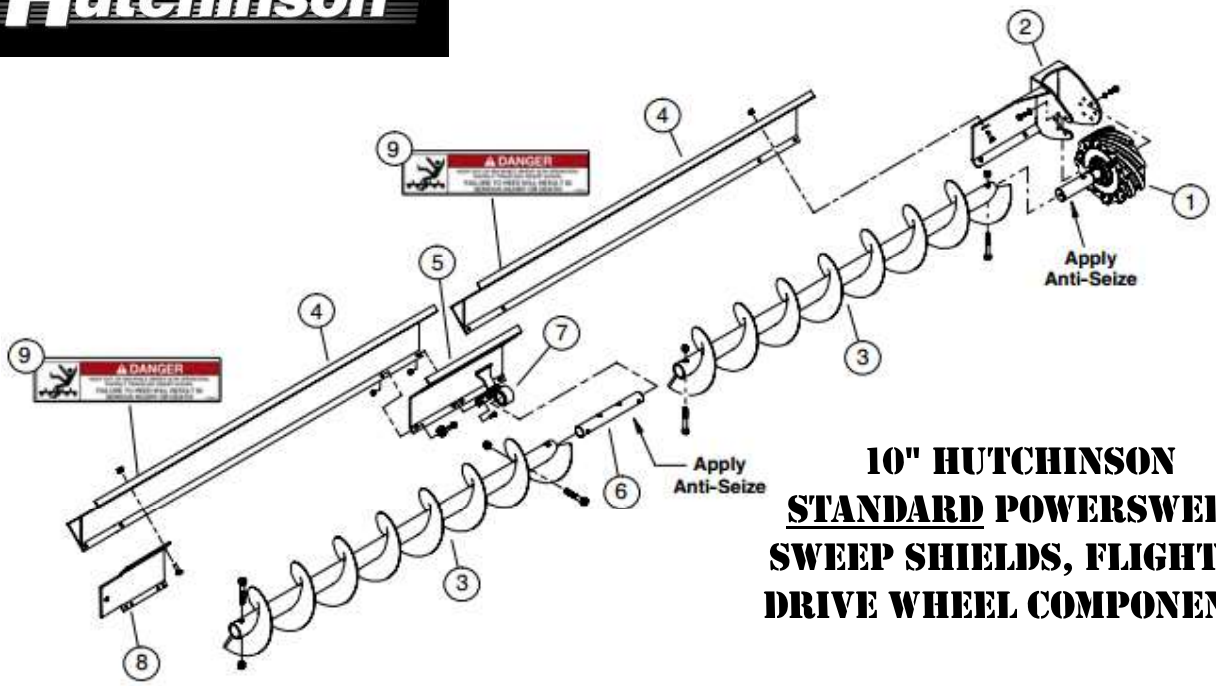

10" HUTCHINSON STANDARD POWERSWEEP SWEEP SHIELDS, FLIGHTS & DRIVE WHEEL COMPONENTS

REF #	PART #	DESCRIPTION
1	1045372	Wheel, Sweep Drive
2	1045077	Drive Wheel Mount Weldment
3	1016708	Flight, 4'-4" Long
(3)	1017705	Flight, 5'-6" Long
(3)	1017607	Flight, 7'-0" Long
(3)	1017709	Flight, 8'-6"
(3)	5342H	Flight, 5'-10"
(3)	1016622	Flight, 7'-4"
(3)	5345H	Flight, 8'-10"
4	1046521	Sweep Shield, 53-1/8" Long
(4)	1046677	Sweep Shield, " Long

REF #	PART #	DESCRIPTION
(4)	1046518	Sweep Shield, 72-1/4"
(4)	1030064	Sweep Shield, 86-1/4"
(4)	1046524	Sweep Shield, 90-1/4"
(4)	1046680	Sweep Shield, 104-1/4"
(4)	1046659	Sweep Shield, 108-1/4"
5	1030045	Splice Plate f/ Sweep Shield
6	1045D	Stub, 1-1/2" dia. x 11-1/2" Long
7	1030096	Bearing Assembly f/ Sweep Shield
--	1051D	Bronze Bushing w/ Bearing Assy.
8	1030042	Plate, Shield to Gearbox Attachment

Hutchinson

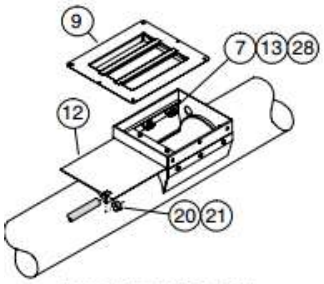

Inner Intermediate Well Weld-On

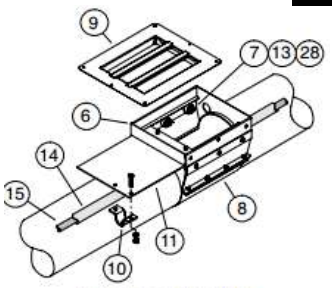

Inner Intermediate Well Band-On

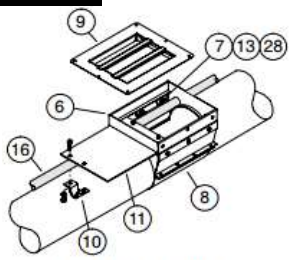

Outer Intermediate Well Band-On f/ 42' & 48' Bins Well Gate used f/ Band-On & Weld-On Outer Wells

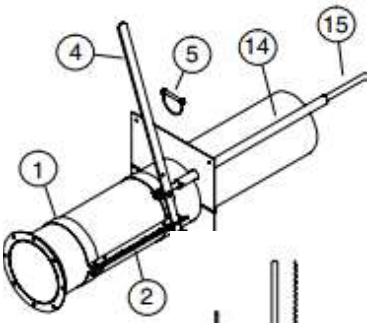

10" HUTCHINSON STANDARD POWERSWEEP UNLOADING TUBE COMPONENTS

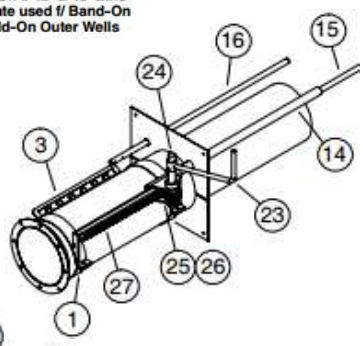

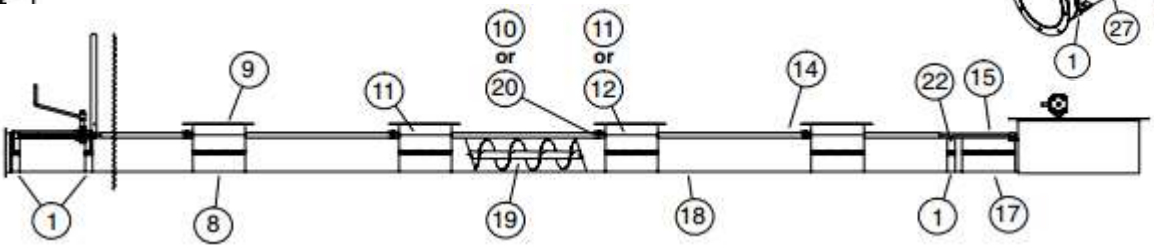

REF #	PART #	DESCRIPTION
1	5035A1	Half Band, 10" Galv. x 2" Wide
2	1022413	Pull Bar (24' - 30' Bins)
3	1023964	Pull Bar (42' - 48' Bins)
4	1022410	Control Handle
5	1016747	Lynch Pin
6	1047935	10" Intermediate Well Wldmnt (Band-On)
7	33025	Washer, 1/2" Flat PLT
8	1015003	10" Back Band Wldmnt
9	1047861	10" Top Flange
10	50471A1	Clamp f/ Inter. Weel Gate (Band-On)
11	1047576	10" Intermediate Well Gate f/ Band-On & Outer Two Wells of Weld-On
12	1047574	10" Intermediate Well Gate f/ Weld-On Wells Excl. Outer Two Wells
13	51867	Nylon Wheel
	CONTROL PIPE 1-3/8" OD f/ INTERMEDIATE WELL GATE	
(14)	1016729	10'-10" Long
(14)	1016962	11'-0" Long
(14)	1016963	12'-0" Long
(14)	1016964	14'-5" Long
(14)	1016965	15-6" Long
(14)	1016730	16'-5" Long
(14)	1014629	18'-3" Long
(14)	1016732	21'-0" Long

REF #	PART #	DESCRIPTION
15	*CONTROL PIPE 7/8" OD f/ CENTER WELL GATE*	
(15)	1024022	11'-6" Long
(15)	1024023	13'-0" Long
(15)	1024024	14'-6" Long
(15)	1024025	16'-6" Long
(15)	1024026	17'-6" Long
(15)	1024027	19'-0" Long
(15)	1024028	20'-6" Long
(15)	1024029	21'-0" Long (f/ 42' - 48' Bins)
(15)	1024030	2'-6" Long (f/ 48' Bins)
	CONTROL PIPE 7/8" OD f/ OUTER INTERMEDIATE WELL GATES	
(16)	1024040	7' 2-1/2" Long f/ 42' Bins
(16)	1024041	7' 11-1/2" Long f/ 48' Bins
17	5161B1	10" Connecting Band x 12" Long
	UNLOAD TUBE (BAND-ON WELLS)	
(18)	6396A91	Tube f/ 24' Bin, 12'-6" Long
(18)	6397A91	Tube f/ 27' Bin, 14'-0" Long
(18)	6398A91	Tube f/ 30' Bin, 15'-6" Long
(18)	11834	Tube f/ 33' Bin, 17'-6" Long
(18)	1025000	Tube f/ 36' Bin, 19'-0" Long
(18)	1024060	Tube f/ 39' Bin, 20'-6" Long
(18)	6400A91	Tube f/ 42' Bin, 22'-0" Long
(18)	6401A91	Tube f/ 48' Bin, 25'-0" Long

8 - MOTORS & ACCESSORIES

Auger HP Requirements	2-3
Fan Motors	4-5
Weg Farm-Duty Motors	6
Pulleys & Taper-Lock Bushings	7-9
V-Belts	10-11
Capacitors	12-13
VFD's & Soft Starts	14-20

FOR WET GRAIN

Use The Chart Below To Determine What Motor Horse Power Your Auger Requires
Based On Auger Diameter, Length and Degree Of Incline
This Chart Is To Be Used For WET GRAIN or FEED

AUGER LENGTH	AUGER DIAMETER																			
	4”				6”				8”				10”				12”			
	AUGER DEGREE OF INCLINE																			
	0°	25°	45°	90°	0°	25°	45°	90°	0°	25°	45°	90°	0°	25°	45°	90°	0°	25°	45°	90°
10’	1/2	1/2	1/2	1/2	3/4	3/4	1	2	1.5	2	2	3	3	3	3	5	3	5	5	7.5
15’	1/2	3/4	3/4	3/4	1.5	2	2	3	2	3	3	5	3	5	5	7.5	5	5	7.5	10
20’	3/4	1	1	1.5	2	3	3	5	3	5	7.5	7.5	5	7.5	10	10	7.5	7.5	10	15
25’	1	1.5	1.5	2	3	3	5	5	5	7.5	7.5	10	7.5	10	10	12.5	10	15	15	20
30’	2	2	2	X	3	5	5	7.5	7.5	7.5	10	12.5	10	10	12.5	15	10	15	20	25
35’	2	2	X	X	5	5	7.5	7.5	7.5	10	12.5	15	10	15	15	20	15	20	25	30
40’					5	7.5	7.5	X	10	12.5	15	20	15	20	25	X	20	25	30	X
45’					7.5	7.5	X	X	10	12.5	20	20	20	25	25	X	25	30	30	X
50’					7.5	X	X	X	15	20	20	X	20	25	25	X	25	30	40	X
55’									20	20	25	X	25	25	30	X	30	40	40	X
60’									20	25	25	X	25	30	40	X	40	40	40	X
65’									25	30	X	X	30	40	40	X	40	40	X	X
70’									30	30	X	X	30	40	40	X	40	X	X	X
75’									30	X	X	X	40	40	X	X				

REQUIRED MOTOR H.P.

FOR DRY GRAIN

Use The Chart Below To Determine What Motor Horse Power Your Auger Requires
Based On Auger Diameter, Length and Degree Of Incline
This Chart Is To Be Used For DRY GRAIN

REQUIRED MOTOR H.P.

AUGER LENGTH	AUGER DIAMETER																			
	4”				6”				8”				10”				12”			
	AUGER DEGREE OF INCLINE																			
	0°	25°	45°	90°	0°	25°	45°	90°	0°	25°	45°	90°	0°	25°	45°	90°	0°	25°	45°	90°
10’	1/2	1/2	1/2	1/2	3/4	3/4	3/4	1	1.5	2	2	3	3	3	3	5	3	5	5	7.5
15’	1/2	1/2	3/4	3/4	1	1.5	2	2	2	3	3	5	3	3	5	7.5	5	5	7.5	10
20’	3/4	3/4	1	1	2	2	2	3	3	5	5	7.5	5	7.5	7.5	10	7.5	7.5	10	15
25’	1	1	1	1.5	2	2	3	5	5	5	7.5	10	5	7.5	10	12.5	10	10	15	20
30’	1.5	1.5	2	2	2	3	5	5	5	7.5	7.5	12.5	7.5	10	12.5	15	10	15	15	20
35’	1.5	2	2	X	3	5	5	7.5	7.5	10	10	15	7.5	10	15	20	15	15	20	25
40’	2	2	X	X	5	5	7.5	X	7.5	10	12.5	20	10	15	20	X	15	20	25	30
45’	2	X	X	X	5	7.5	7.5	X	10	12.5	15	20	15	20	25	X	20	25	30	X
50’					5	7.5	X	X	12.5	15	20	X	20	20	25	X	20	25	30	X
55’					7.5	7.5	X	X	15	20	20	X	20	25	30	X	25	30	30	X
60’									15	20	25	X	25	25	30	X	30	30	40	X
65’									20	25	30	X	25	30	40	X	30	40	X	X
70’									25	25	30	X	30	30	40	X	40	40	X	X
75’									25	30	X	X	30	40	X	X	40	X	X	X
80’									30	30	X	X	30	40	X	X	40	X	X	X

AXIAL FAN
MOTORS

1-PHASE

USED ON	HP	RPM	FRAME	SHAFT DIA.	PART #
12" Axial Fan	1	3500	56Z	5/8"	H1000
14" Axial Fan	1-1/2	3500	56Z	5/8"	H1605
18" Axial Fan	3	3500	145T	7/8"	H2945
24" Axial Fan	5-7	3500	182TZ	1-1/8"	H4395
24" Axial Fan	7-10	3500	182TZ	1-1/8"	H5022
28" Axial Fan	10-15	3500	215TZ	1-1/8"	H5760
38" Axial Fan & 38" / 44" Portable Dryers	10-17	1765	215Z	1-5/8"	H5755
28" Portable Dryers	10-15	1765	215Z	1-1/8"	H5753

3-PHASE

USED ON	HP	RPM	FRAME	SHAFT DIA.	PART #
12" Axial Fan	1	3500	56Z	5/8"	H1050
14" Axial Fan	1-1/2	3500	143TZ	5/8"	H1900
18" Axial Fan	3	3500	145T	7/8"	H3000
24" Axial Fan	5-7	3500	184TZ	1-1/8"	H4430
24" Axial Fan	7-10	3500	184TZ	1-1/8"	H5055
28" Axial Fan	10-15	3500	215T	1-1/8"	H5775
38" Axial Fan 38" / 44" Portable Dryers	10-17	1765	254T	1-5/8"	H6275
28" Portable Dryers	10-15	1765	215	1-1/8"	H5758
38" Portable Dryer	20	1765	256T	1-5/8"	---
44" Portable Dryer	30	1775	286T	1-7/8"	H7125
44" Portable Dryer	40	1775	324T	2-1/8"	H7175

CENTRIFUGAL FAN
MOTORS

1-PHASE

USED ON	HP	RPM	FRAME	SHAFT DIA.	PART #
18" Inline Centrifugal Fan	4.5	3500	J56HZ	7/8"	H3500
24" Inline Centrifugal Fan	5-7	3500	182TZ	1-1/8"	H4395
24" Inline Centrifugal Fan	7-10	3500	182TZ	1-1/8"	H5022
28" Inline Centrifugal Fan	10-15	3500	215TZ	1-1/8"	H5760
3HP Hi-Speed Centrifugal	3	3500	KX182T	1-1/8"	H3100
5HP Hi-Speed Centrifugal	5	3500	PX184T	1-1/8"	H3900
7.5HP Hi-Speed Centrifugal	7.5	3500	213T	1-3/8"	H4700
10HP Hi-Speed Centrifugal	10	3500	215T	1-3/8"	H5400
3HP Centrifugal Fan	3	1750	LX184T	1-1/8" Ext. Shaft	H2885
5HP Centrifugal Fan	5	1750	MX184T	1-1/8" Ext. Shaft	H3790
7.5 Centrifugal Fan	7.5	1750	215T	1-3/8" Ext. Shaft	H4625
10HP Centrifugal Fan	10	1750	215TY	1-3/8" Ext. Shaft	---
15HP Centrifugal Fan	15	1750	256TZ	1-5/8" Ext. Shaft	H6030

3-PHASE

USED ON	HP	RPM	FRAME	SHAFT DIA.	PART #
24" Inline Centrifugal Fan	5-7	3500	184TZ	1-1/8"	H4430
24" Inline Centrifugal Fan	7-10	3500	184TZ	1-1/8"	H5055
28" Inline Centrifugal Fan	10-15	3500	215Z	1-1/8"	H5775
3HP Hi-Speed Centrifugal	3	3500	182T	1-1/8"	H3150
5HP Hi-Speed Centrifugal	5	3500	JX184T	1-1/8"	H3950
7.5HP Hi-Speed Centrifugal	7.5	3500	MX213T	1-3/8"	H4750
10HP Hi-Speed Centrifugal	10	3500	215T	1-3/8"	H5450
3HP Centrifugal Fan	3	1750	GX182T	1-1/8" Ext. Shaft	H3245
5HP Centrifugal Fan	5	1750	KX184T	1-1/8" Ext. Shaft	H4110
7.5HP Centrifugal Fan	7.5	1750	213T	1-3/8" Ext. Shaft	H4800
10HP Centrifugal Fan	10	1750	215TZ	1-3/8" Ext. Shaft	H5475
15HP Centrifugal Fan	10-17	1750	254T	1-5/8"	H6275
20HP Centrifugal Fan	20	1750	256T	1-5/8"	H6800
30HP Centrifugal Fan	30	1750	286T	1-7/8"	H7125

FARM-DUTY MOTORS

1 PHASE

HP	RPM	FRAME	SHAFT DIA.	VOLTAGE	AMPS	WEIGHT	PART #
1/2	1800	56	5/8"	115/230	7.4/3.7	25 Lbs.	.5018ES1RFDW56-S
3/4	1800	56	5/8"	115/230	10.6/5.3	28 Lbs.	.7518ES1RFD56-S
1	1800	56	5/8"	115/230	14/7	36 Lbs.	00118ES1RFD56-S
1-1/2	1800	143/5T	7/8"	115/230	17.4/8.7	50 Lbs.	00158ES1RFD145T-S
2	1800	143/5T	7/8"	115/230	21/10.5	57 Lbs.	00218ES1RFD145T-S
3	1800	182/4T	1-1/8"	230	14.5	99 Lbs.	00318ES1DFD184T-W22
5	1800	184T	1-1/8"	230	21.4	119 Lbs.	00518ES1DFD184T-W22
7-1/2	1800	215T	1-3/8"	230	33	169 Lbs.	00718ES1DFD215T-W22
10	1800	215T	1-3/8"	230	40	182 Lbs.	01018ES1DFD215T-W22
12-1/2	1800	215T	1-3/8"	230	53	225 Lbs.	01218ES1E215T-W22
16	1800	256TZ	1-5/8"	230	71/62	288 Lbs.	L3912T

~ HUNDREDS OF MOTORS IN STOCK ~

3 PHASE

HP	RPM	FRAME	SHAFT DIA.	VOLTAGE	AMPS	WEIGHT	PART #
1	1800	143/5T	7/8"	208-230/460	3.25-2.94/1.47	43 Lbs.	00118ET3E143T-S
1-1/2	1800	143/5T	7/8"	208-230/460	4.47-4.04/2.02	43 Lbs.	00158ET3E145T-S
2	1800	143/5T	7/8"	208-230/460	6.02-5.44/2.72	47 Lbs.	00218ET3E145T-S
3	1800	182/4T	1-1/8"	208-230/460	9.18-8.3/4.15	96 Lbs.	00318ET3E182T-W22
5	1800	182/4T	1-1/8"	208-230/460	15-13.6/6.8	105 Lbs.	00518ET3E184T-W22
7-1/2	1800	213/5T	1-3/8"	208-230/460	21-18.8/9.4	169 Lbs.	00718ET3E213T-W22
10	1800	213/5T	1-3/8"	208-230/460	28.1-25.4/12.7	192 Lbs.	01018ET3E215T-W22
15	1800	254/6T	1-5/8"	208-230/460	39.4-35.6/17.8	333 Lbs.	01518ET3E254T-W22
20	1800	254/6T	1-5/8"	208-230/460	53.3-48.2/24.1	363 Lbs.	02018ET3E256T-W22
25	1800	284/6T	1-7/8"	208-230/460	65-59.2/29.6	425 Lbs.	02518ET3E284T-W22
30	1800	284/6TS	1-7/8"	208-230/460	77.6-70.2/35.1	479 Lbs.	03018ET3E286T-W22
40	1800	324/6T	2-1/8"	208-230/460	107-96.4/48.2	135 Lbs.	04018ET3E324T-W22
50	1800	324/6TS	2-1/8"	208-230/460	131-118/59.2	462 Lbs.	05018ET3E326T-W22
60	1800	364/5TS	2-3/8"	208-230/460	151-137/68.3	1,022 Lbs.	06018ET3E364T-W22
75	1800	364/5TS	2-3/8"	208-230/460	186-168/84.1	1,039 Lbs.	07518ET3E365T-W22
100	1800	404/5TS	2-7/8"	208-230/460	245-222/111	1,267 Lbs.	10018ET3E405T-W22

*ALL PULLEYS REQUIRE AN
"H" STYLE BUSHING TO MATCH
YOUR SHAFT DIAMETER
SEE PAGE BUSHING PAGES

Light Duty

1-GROOVE PULLEYS

OUTSIDE DIA.	PART #
3.15"	BK30H
3.35"	BK32H
3.55"	BK34H
3.75"	BK36H
3.95"	BK40H
4.25"	BK45H
4.45"	BK47H
4.75"	BK50H
4.95"	BK52H
5.25"	BK55H
5.45"	BK57H
5.75"	BK60H
5.95"	BK62H
6.25"	BK65H
6.45"	BK67H
6.75"	BK70H
6.95"	BK72H
7.25"	BK75H
7.45"	BK77H
7.75"	BK80H
8.25"	BK85H
8.75"	BK90H
9.25"	BK95H
9.75"	BK100H
10.25"	BK105H
10.75"	BK110H
11.25"	BK115H
11.75"	BK120H
12.75"	BK130H
13.75"	BK140H
14.75"	BK150H
15.75"	BK160H
18.75"	BK190H

2-GROOVE PULLEYS

OUTSIDE DIA.	PART #
3.15"	N/A
3.35"	2BK32H
3.55"	2BK34H
3.75"	2BK36H
3.95"	2BK40H
4.25"	2BK45H
4.45"	2BK47H
4.75"	2BK50H
4.95"	2BK52H
5.25"	2BK55H
5.45"	2BK57H
5.75"	2BK60H
5.95"	2BK62H
6.25"	2BK65H
6.45"	2BK67H
6.75"	2BK70H
6.95"	N/A
7.25"	N/A
7.45"	N/A
7.75"	2BK80H
8.25"	N/A
8.75"	2BK90H
9.25"	N/A
9.75"	2BK100H
10.25"	N/A
10.75"	2BK110H
11.25"	N/A
11.75"	2BK120H
12.75"	2BK130H
13.75"	2BK140H
14.75"	N/A
15.75"	2BK160H
18.75"	2BK190H

Heavy Duty

*ALL PULLEYS REQUIRE A BUSHING TO MATCH YOUR SHAFT DIAMETER SEE BUSHING PAGES

2-GROOVE PULLEYS

OUTSIDE DIA.	PART #	BUSHING REQ.
3.75"	2B34SH	SH
3.95"	2B36SH	SH
4.15"	2B38SH	SH
4.35"	2B40SH	SH
4.55"	2B42SH	SH
4.75"	2B44SH	SH
4.95"	2B46SDS	SD
5.15"	2B48SDS	SD
5.35"	2B50SDS	SD
5.55"	2B52SDS	SD
5.75"	2B54SDS	SD
5.95"	2B56SDS	SD
6.15"	2B58SDS	SD
6.35"	2B60SDS	SD
6.55"	2B62SDS	SD
6.75"	2B64SDS	SD
6.95"	2B66SDS	SD
7.15"	2B68SDS	SD
7.35"	2B70SK	SK
7.75"	2B74SK	SK
8.35"	2B80SK	SK
8.95"	2B86SK	SK
9.35"	2B90SK	SK
9.75"	2B94SK	SK
10.75"	2B110SK	SK
12.75"	2B124SK	SK
13.95"	2B136SK	SK
15.35"	2B150SK	SK
15.75"	2B154SK	SK
16.35"	2B160SK	SK
18.75"	2B184SK	SK
20.35"	2B200SF	SF
25.35"	2B250SF	SF
30.35"	2B300SF	SF
38.35"	2B380SF	SF

3-GROOVE PULLEYS

OUTSIDE DIA.	PART #	BUSHING REQ.
3.75"	3B34SH	SH
3.95"	3B36SH	SH
4.15"	3B38SH	SH
4.35"	3B40SH	SH
4.55"	3B42SH	SH
4.75"	3B44SH	SH
4.95"	3B46SD	SD
5.15"	3B48SD	SD
5.35"	3B50SD	SD
5.55"	3B52SD	SD
5.75"	3B54SD	SD
5.95"	3B56SD	SD
6.15"	3B58SD	SD
6.35"	3B60SD	SD
6.55"	3B62SD	SD
6.75"	3B64SD	SD
6.95"	3B66SD	SD
7.15"	3B68SD	SD
7.35"	3B70SK	SK
7.75"	3B74SK	SK
8.35"	3B80SK	SK
8.95"	3B86SK	SK
9.35"	3B90SK	N/A
9.75"	3B94SK	SK
10.35"	3B100SK	SK
11.35"	3B110SK	SK
12.75"	3B124SK	SK
13.95"	3B136SK	SK
15.35"	3B150SK	SK
15.75"	3B154SK	SK
16.35"	3B160SK	SK
18.35"	3B180SK	SK
18.75"	3B184SK	SK
20.35"	3B200SF	SF
25.35"	3B250SF	SF
30.35"	3B300SF	SF

Heavy Duty

4-GROOVE PULLEYS

OUTSIDE DIA.	PART #	BUSHING REQ.
3.75"	4B34SD	SD
3.95"	4B36SD	SD
4.15"	4B38SD	SD
4.35"	4B40SD	SD
4.55"	4B42SD	SD
4.75"	4B44SD	SD
4.95"	4B46SD	SD
5.15"	4B48SD	SD
5.35"	4B50SD	SD
5.55"	4B52SD	SD
5.75"	4B54SD	SD
5.95"	4B56SD	SD
6.15"	4B58SD	SD
6.35"	4B60SD	SD
6.55"	4B62SD	SD
6.75"	4B64SD	SD
6.95"	4B66SD	SD
7.15"	4B68SD	SD
7.35"	4B70SK	SK
7.75"	4B74SK	SK
8.35"	4B80SK	SK
8.95"	4B86SK	SK
9.35"	4B90SK	SK
9.75"	4B94SK	SK
10.35"	4B100SK	SK
11.35"	4B110SK	SK
12.35"	4B124SK	SK
13.95"	4B136SK	SK
15.35"	4B150SF	SF
15.75"	4B154SF	SF
16.35"	4B160SF	SF
18.75"	4B184SF	SF
20.35"	4B200SF	SF

BUSHINGS

STYLE	TORQUE SPECS	PART #
H	7.9 lb-ft	H-XX
	95 lb-in	
SH	9.0 lb-ft	SH-XX
	108 lb-in	
SD	9.0 lb-ft	SD-XX
	108 lb-in	
SK	15.0 lb-ft	SK-XX
	180 lb-ft	
SF	30.0 lb-ft	SF-XX
	360 lb-in	

To Order Bushings, Use The Part And Replace "XX" With Your Shaft Diameter

FIXED BORE PULLEYS

GROOVE	O.D.	I.D.	PART #
1	2.15"	5/8"	BK20-5/8
1	2.40"	5/8"	BK24-5/8
1	2.65"	5/8"	BK25-5/8
1	2.65"	7/8"	BK25-7/8
2	2.15"	5/8"	2BK20-5/8
2	2.65"	5/8"	2BK25-5/8
2	2.65"	7/8"	2BK25-7/8

CARLISLE

Super II V-Belts

A-Belt sizes are measured on the inside. For outside measurements, add 2 inches.

PART #	PART #	PART #	PART #	PART #
A21-C	A39-C	A57-C	A75-C	A93-C
A22-C	A40-C	A58-C	A76-C	A94-C
A23-C	A41-C	A59-C	A77-C	A95-C
A24-C	A42-C	A60-C	A78-C	A96-C
A25-C	A43-C	A61-C	A79-C	A97-C
A26-C	A44-C	A62-C	A80-C	A98-C
A27-C	A45-C	A63-C	A81-C	A100-C
A28-C	A46-C	A64-C	A82-C	A103-C
A29-C	A47-C	A65-C	A83-C	A105-C
A30-C	A48-C	A66-C	A84-C	A110-C
A31-C	A49-C	A67-C	A85-C	A112-C
A32-C	A50-C	A68-C	A86-C	A120-C
A33-C	A51-C	A69-C	A87-C	A128-C
A34-C	A52-C	A70-C	A88-C	A136-C
A35-C	A53-C	A71-C	A89-C	A144-C
A36-C	A54-C	A72-C	A90-C	A158-C
A37-C	A55-C	A73-C	A91-C	A173-C
A38-C	A56-C	A74-C	A92-C	A180-C

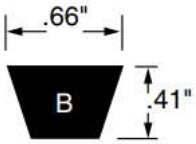

B-Belt sizes are measured on the inside. For outside measurements, add 3 inches.

PART #	PART #	PART #	PART #	PART #
B22-C	B45-C	B68-C	B90-C	B124-C
B23-C	B46-C	B69-C	B91-C	B126-C
B24-C	B47-C	B70-C	B92-C	B128-C
B25-C	B48-C	B71-C	B93-C	B130-C
B26-C	B49-C	B72-C	B94-C	B133-C
B27-C	B50-C	B73-C	B95-C	B136-C
B28-C	B51-C	B74-C	B96-C	B140-C
B29-C	B52-C	B75-C	B97-C	B142-C
B30-C	B53-C	B76-C	B98-C	B143-C
B31-C	B54-C	B77-C	B99-C	B144-C
B32-C	B55-C	B78-C	B100-C	B148-C
B33-C	B56-C	B79-C	B101-C	B150-C
B34-C	B57-C	B80-C	B103-C	B154-C
B35-C	B58-C	B81-C	B105-C	B156-C
B36-C	B59-C	B82-C	B106-C	B158-C
B37-C	B60-C	B83-C	B108-C	B160-C
B38-C	B61-C	B84-C	B112-C	B162-C
B39-C	B62-C	B85-C	B115-C	B173-C
B40-C	B63-C	B86-C	B116-C	B180-C
B41-C	B64-C	B87-C	B118-C	B188-C
B42-C	B65-C	B88-C	B120-C	B191-C
B43-C	B66-C	B89-C	B123-C	B195-C
B44-C	B67-C			

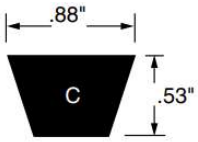

C-Belt sizes are measured on the inside. For outside measurements, add 4 inches.

PART #	PART #	PART #	PART #	PART #
C51-C	C78-C	C101-C	C120-C	C150-C
C55-C	C81-C	C105-C	C124-C	C158-C
C60-C	C85-C	C109-C	C128-C	C162-C
C68-C	C90-C	C111-C	C136-C	C173-C
C72-C	C96-C	C112-C	C144-C	C180-C
C75-C	C100-C	C115-C	C148-C	C195-C
				C255-D

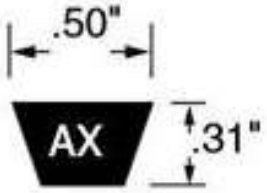

CARLISLE Gold Ribbon "Raw Edge"

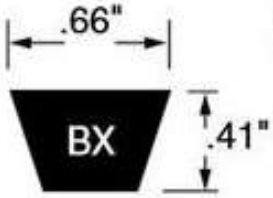

PART #
AX20-C
AX21-C
AX22-C
AX23-C
AX24-C
AX25-C
AX26-C
AX27-C
AX28-C
AX29-C
AX30-C
AX31-C
AX32-C
AX33-C
AX34-C
AX35-C
AX36-C
AX37-C
AX38-C
AX39-C
AX40-C

PART #
AX41-C
AX42-C
AX43-C
AX44-C
AX45-C
AX46-C
AX47-C
AX48-C
AX49-C
AX50-C
AX51-C
AX52-C
AX53-C
AX54-C
AX55-C
AX56-C
AX57-C
AX58-C
AX59-C
AX60-C
AX61-C

PART #
AX62-C
AX63-C
AX64-C
AX65-C
AX66-C
AX67-C
AX68-C
AX69-C
AX70-C
AX71-C
AX72-C
AX73-C
AX74-C
AX75-C
AX76-C
AX77-C
AX78-C
AX79-C
AX80-C
AX81-C
AX82-C

PART #
AX83-C
AX84-C
AX85-C
AX86-C
AX87-C
AX88-C
AX89-C
AX90-C
AX91-C
AX92-C
AX93-C
AX94-C
AX95-C
AX96-C
AX97-C
AX98-C
AX99-C
AX100-C

PART #
BX23-C
BX26-C
BX27-C
BX28-C
BX29-C
BX30-C
BX31-C
BX32-C
BX33-C
BX34-C
BX35-C
BX36-C
BX37-C
BX38-C
BX39-C
BX40-C
BX41-C
BX42-C
BX43-C
BX44-C
BX45-C

PART #
BX46-C
BX47-C
BX48-C
BX49-C
BX50-C
BX51-C
BX52-C
BX53-C
BX54-C
BX55-C
BX56-C
BX57-C
BX58-C
BX59-C
BX60-C
BX61-C
BX62-C
BX63-C
BX64-C
BX65-C
BX66-C

PART #
BX67-C
BX68-C
BX69-C
BX70-C
BX71-C
BX72-C
BX73-C
BX74-C
BX75-C
BX76-C
BX77-C
BX78-C
BX79-C
BX80-C
BX81-C
BX82-C
BX83-C
BX84-C
BX85-C
BX86-C
BX87-C

PART #
BX88-C
BX89-C
BX90-C
BX91-C
BX92-C
BX93-C
BX94-C
BX95-C
BX96-C
BX97-C
BX98-C
BX99-C
BX100-C

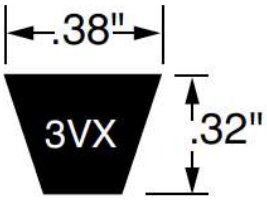

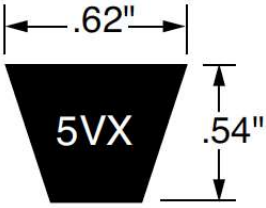

PART #
3VX250-C
3VX265-C
3VX280-C
3VX300-C
3VX315-C
3VX335-C
3VX355-C
3VX375-C
3VX400-C
3VX425-C

PART #
3VX450-C
3VX475-C
3VX500-C
3VX530-C
3VX560-C
3VX670-C
3VX710-C
3VX750-C
3VX800-C
3VX850-C

PART #
3VX900-C
3VX950-C
3VX1000-C
3VX1120-C
3VX1180-C
3VX1250-C
3VX1320-C
3VX1400-C
3VX1500-C

PART #
5VX450-C
5VX470-C
5VX490-C
5VX500-C
5VX510-C
5VX530-C
5VX540-C
5VX550-C
5VX560-C
5VX570-C
5VX580-C
5VX590-C
5VX600-C

PART #
5VX610-C
5VX630-C
5VX650-C
5VX660-C
5VX670-C
5VX680-C
5VX690-C
5VX710-C
5VX730-C
5VX740-C
5VX750-C
5VX780-C
5VX800-C

PART #
5VX810-C
5VX830-C
5VX840-C
5VX850-C
5VX860-C
5VX880-C
5VX900-C
5VX930-C
5VX960-C
5VX1000-C
5VX1030-C
5VX1060-C
5VX1080-C

PART #
5VX1120-C
5VX1150-C
5VX1160-C
5VX1180-C
5VX1230-C
5VX1250-C
5VX1400-C
5VX1500-C
5VX1600-C
5VX1700-C
5VX1800-C
5VX2000-C

START CAPACITORS

Packard
Supplying HVACR solutions with your needs in mind.

110-125VAC - START

MFD	Dimensions (Dia. x Length)	Part #
124-149	1-3/8" x 2-3/4"	PMJ124
145-174	1-3/8" x 2-3/4"	PMJ145
161-193	1-3/8" x 2-3/4"	PMJ161
189-227	1-3/8" x 2-3/4"	PMJ189
216-259	1-3/8" x 2-3/4"	PMJ216
270-324	1-3/8" x 2-3/4"	PMJ270
340-408	1-3/8" x 2-3/4"	PMJ340
430-516	2" x 3-3/8"	PMJ430
430-516	2" x 3-3/8"	PMJ430B
540-648	1-3/4" x 3-3/8"	PMJ540
540-648	1-3/4" x 3-3/8"	PMJ540A
590-708	1-13/16" x 3-3/8"	PMJ590A
708-850	2-1/16" x 4-3/8"	PMJ708A
815-978	1-13/16" x 4-3/8"	PMJ815

330VAC - START

MFD	Dimensions (Dia. x Length)	Part #
108-130	1-3/4" x 3-3/8"	PRMJ108R
130-158	2" x 4-3/8"	PRMJ130
130-158	2" x 4-3/8"	PRMJ130R
145-174	2" x 4-3/8"	PRMJ145
216-259	2" x 4-3/8"	PRMJ216A
270-324	2-1/2" x 4-3/8"	PRMJ270

220-250VAC - START

MFD	Dimensions (Dia. x Length)	Part #
30-36	1-3/8" x 2-3/4"	PTMJ30
43-53	1-3/8" x 2-3/4"	PTMJ43
53-64	1-3/8" x 2-3/4"	PTMJ53
88-108	1-3/4" x 3-3/8"	PTMJ88
145-174	1-3/4" x 3-3/8"	PTMJ145
161-193	2" x 3-3/8"	PTMJ161
189-227	2" x 4-1/4"	PTMJ189A
189-227	2" x 4-3/8"	PTMJ189
216-259	2-1/16" x 4-3/8"	PTMJ216A
216-259	2" x 3-3/8"	PTMJ216
270-324	2" x 3-3/8"	PTMJ270A
270-324	2" x 4-3/8"	PTMJ270
340-408	2" x 4-3/8"	PTMJ340
400-480	5-1/2" x 4-3/8"	PTMJ400A
400-480	2-1/16" x 4-3/8"	PTMJ400
430-516	2-1/2" x 4-3/8"	PTMJ430

weg

WEG START CAPACITORS

Voltage	MFD	Dimensions (Dia. x Length)	Part #
110-127	270-324	1-7/16" x 3-3/8"	SCP-270-324/110VLTG
110-127	340-408	1-7/16" x 3-3/8"	SCP-340-408/110VLTG
110-127	430-516	1-7/16" x 3-3/8"	SCP-430-516/110VLTG
110-127	540-648	1-7/16" x 3-3/8"	SCP-540-648/110VLTG
250	189-227	1-7/16" x 3-3/8"	SCP-189-227/250VLTG
250	216-259	1-3/4" x 3-3/8"	SCP-216-259/250VLTG
250	270-324	1-3/4" x 3-3/8"	SCP-270-324/250VLTG
250	340-408	1-3/4" x 3-3/8"	SCP-340-408/250VLTG
330	270-324	1-3/4" x 4-1/4"	SCP-270-324/330VLTG

RUN CAPACITORS

Packard
Supplying HVACR solutions with your needs in mind.

440VAC - RUN

MFD	Dimensions (Dia. x Length)	Part #
10	1-3/4" x 2-3/8"	PRCF10A
15	1-3/4" x 2-3/8"	PRCF15A
25	1-3/4" x 2-7/8"	PRCF25A
30	1-3/4" x 2-7/8"	PRCF30A
35	1-3/4" x 3-3/4"	PRCF35A
40	1-3/4" x 3-3/4"	PRCF40A
45	1-3/4" x 3-7/8"	PRCF45A
50	2" x 3-7/8"	PRCF50A
55	2" x 5-1/4"	PRCF55A
60	2" x 4-3/4"	PRCF60A
70	2" x 4-3/4"	PRCF70A

370VAC - RUN

MFD	Dimensions (Dia. x Length)	Part #
5	2" (Oval)	TOC5
10	2" x 2-1/2" (Oval)	TOC10
10	2" x 3-1/4"	POC10B
10	1-3/4" x 2-3/8"	PRC10A
12.5	1-3/4" x 2-3/8"	PRC12.5A
15	1-3/4" x 2-3/8"	PRC15A
20	1-3/4" x 2-3/8"	PRC20A
25	1-3/4" x 2-3/8"	PRC25A
30	1-3/4" x 2-3/8"	PRC30A
35	1-3/4" x 2-7/8"	PRC35A
40	1-3/4" x 2-7/8"	PRC40A
45	1-7/8" x 3-3/4"	PRC45A
50	1-3/4" x 3-3/4"	PRC50A
55	1-3/4" x 3-7/8"	PRC55A
60	1-3/4" x 3-3/8"	PRC60A
65	2-3/4" x 4-3/4"	PRC65
70	2-3/8" x 4-3/4"	PRC70
70	2" x 5-1/4"	PRC70A
80	2" x 3-3/4"	PRC80A

weg

WEG RUN CAPACITORS

Voltage	MFD	Dimensions (Dia. x Length)	Part #
250	15	1-3/8" x 2-1/8"	RCP-15/250V
250	25	1-3/8" x 2-7/8"	RCP-25/250V
400	15	1-3/8" x 2-7/8"	RCP-15/400V
400	25	1-5/8" x 3-5/8"	RCP-25/400V
400	30	1-5/8" x 3-3/8"	RCP-30/400V
400	45	1-3/4" x 3-5/8"	RCP-45/400V
400	50	1-3/4" x 3-5/8"	RCP-50/400V
400	60	2-1/4" x 3-5/8"	RCP-60/400V
440	30	1-3/4" x 3-5/8"	RCP-30/440V
440	90	2-3/8" x 6-1/8"	RCP-90/440v

CFW 08 Plus Variable Frequency Drive

The WEG CFW-08 line of VFD's offers Single and Three Phase input power supply options for motors up to 20HP. Outstanding features and options in a NEMA 1 enclosure allow the CFW08 Plus to be successfully used in a large variety of applications.

Standard Features Include:

- V/Hz or Sensor-less Vector Control
- NEMA 1 Enclosure
- Single and Three Phase Input Voltage
- 200-240V, 380-480V or 500-600V input Voltage, 50-60Hz
- 150% Current Overload Capacity
- 16 Bit DSP Controlled PWM Output
- 2.5 / 5 / 10 / 15 kHz Adjustable Switching Frequency
- Four Isolated Programmable Digital Inputs
- Two Programmable Relay Outputs
- Two Isolated Programmable Analog Inputs (with special function)
- One Analog Output
- Protective Features: Over Current, Motor Overload, Drive Over Temperature, Output Phase-to-Phase and Phase-to-Ground short Circuit, DC Bus Over and Under Voltage And External Fault
- Control Feature: Linear And "S" Ramp Acceleration and Deceleration, Local/Remote Control, DC Braking, Torque Boost, Motor Slip Compensation, Electronic Pot, Preset Speeds, Adjustable V/Hz Profile, Maximum and Minimum Adjustable Frequency Limits, Two Skip Frequencies, Adjustable Output Current Limit, JOG, Ride-Thru, Flying Start and PID Regulator.
- Display Readings: Motor Speed, Frequency, Voltage, Current, Last Fault, Heat Sink Temperature and Drive Status
- Ambient: 32°F (0°C) to 104°F (40°C), 3300 ft. (1000m) altitude, 90% Humidity, Non-Condensing

Optional Features:

- Dynamic Braking Capabilities Available
- Remote Keypad With Copy Function
- RS-232 or RS-485 Serial Interface
- DIN Rail Mounting Through 2HP
- Modbus Communication*

*Requires Optional RS-232 or RS-485 interface

1-PHASE 230V

NEMA 1 ENCLOSURE

HP	PART #
1/2	CFW08-.5/1P/N1
1	CFW08-1/1P/N1
2	CFW08-2/1P/N1
3	CFW08-3/1P/N1
5	CFW08-5/1P/N1

NEMA 4 ENCLOSURE (Water Tight)

HP	PART #
2	CFW08-2/1P/N4
3	CFW08-3/1P/N4
5	CFW08-5/1P/N4

3-PHASE 230V

NEMA 1 ENCLOSURE

HP	PART #
1/2	CFW08-.5/3P/N1/230
1	CFW08-1/3P/N1/230
2	CFW08-2/3P/N1/230
3	CFW08-3/3P/N1/230
5	CFW08-5/3P/N1/230
7.5	CFW08-7.5/3P/N1/230
10	CFW08-10/3P/N1/230

NEMA 4 ENCLOSURE (Water Tight)

HP	PART #
2	CFW08-2/3P/N4/230
3	CFW08-3/3P/N4/230
5	CFW08-5/3P/N4/230
7.5	CFW08-7.5/3P/N4/230
10	CFW08-10/3P/N4/230

3-PHASE 480V

NEMA 1 ENCLOSURE

HP	PART #
1	CFW08-1/3P/N1/480
2	CFW08-2/3P/N1/480
3	CFW08-3/3P/N1/480
5	CFW08-5/3P/N1/480
7.5	CFW08-7.5/3P/N1/480
10	CFW08-10/3P/N1/480
15	CFW08-15/3P/N1/480
20	CFW08-20/3P/N1/480

NEMA 4 ENCLOSURE (Water Tight)

HP	PART #
1	CFW08-1/3P/N4/480
2	CFW08-2/3P/N4/480
3	CFW08-3/3P/N4/480
5	CFW08-5/3P/N4/480
7.5	CFW08-7.5/3P/N4/480
10	CFW08-10/3P/N4/480
15	CFW08-15/3P/N4/480
20	CFW08-20/3P/N4/480

CFW 700 Series Variable Frequency Drive

The WEG CFW700 Series was designed to exceed industry expectations. Based on the robust CFW11 platform the CFW700 is designed and optimized for variable torque applications such as pumps and fans

A Unique Drive With Unique Characteristics:

- Simplicity - Same Programming As All Other WEG Drives
- DUAL DC Bus Chokes (6%) For Longer VFD Lifetime, Reduces Harmonics Eliminating The Need For External Line Reactors
- 24VDC Power Supply For Process Transducers - Standard
- Soft-PLC With Free Programming Software
- Encoder Input - Standard
- RS-485 Modbus RTU - Standard
- Conformal Coated Boards For Harsh Industrial Environments
- Rated 122°F (50°C) Up To 140°F (60°C) With Derating
- Self-tuning Function Automatically Matches VFD With Motor
- UL, cUL, CE, C-Tick, GOST, IRAM, INMETRO Approved

The CFW700 is the optimal drive for pump and fan control. The drive includes features such as built in PID controllers that can be programmed in engineering units or ease of understanding and set up. The drive also features an integrated power supply to be used with external transducers to measure flow or pressure.

These features combined with the drive's keypad based start up guide, make installation and parameter set up fast and easy.

TECHNOLOGY

WEG Vectrue Technology® uses field oriented vector control algorithms

4 in 1: four control modes in one drive, Linear and adjustable V/F, VVW (Voltage Vector WEG), field oriented Sensorless Vector and Vector with encoder

Energy saving V/F control allows user to adjust V/F curve to match a quadratic (centrifugal) load, optimizing the drive for the specific application and maximizing energy savings.

1-PHASE 230V

NEMA 1 ENCLOSURE	
HP	**PART #**
7.5	CFW700-7.5/1P/N1
10	CFW700-10/1P/N1
12.5	CFW700-12.5/1P/N1
15	CFW700-15/1P/N1

3-PHASE 230V

NEMA 1 ENCLOSURE	
HP	**PART #**
15	CFW700-15/3P/N1-230
20	CFW700-20/3P/N1-230
25	CFW700-25/3P/N1-230
30	CFW700-30/3P/N1-230
40	CFW700-40/3P/N1-230
50	CFW700-50/3P/N1-230
60	CFW700-60/3P/N1-230

3-PHASE 480V

NEMA 1 ENCLOSURE	
HP	**PART #**
25	CFW700-25/3P/N1-480
30	CFW700-30/3P/N1-480
40	CFW700-40/3P/N1-480
50	CFW700-50/3P/N1-480
60	CFW700-60/3P/N1-480

- Sensorless Vector & V/Hz control
- Main Capacitor & Fan Lifecycle Estimation
- Peer to Peer Communications
- Heat Sink Out the Back Mounting Option
- UL Plenum Rated (Standard Enclosure)
- HD operation: - 10 - 50°C
- IP20 / NEMA 1 (KIT)* / NEMA 4X

	IP20	UL Three Phase Ratings				UL Single Phase Ratings									
		Heavy-Duty 150% for 60 Seconds		Normal-Duty 120% for 60 Seconds		Heavy-Duty(CT) Single Phase Input		HD(CT)3 Phase Output	Normal Duty(VT) Single Phase Input		ND(VT)3 Phase Output				
	MODEL #	HP	Amps	HP	Amps	HP	Amps	Amps	HP	Amps	Amps	EMC Filter	DC Reac-tor	Keypad	Part #
Single Phase 200~240 VAC (-15% ~ +10%)	LSLV0004S100-1EONNS	0.5	2.5	1	3.1	-	-	-	-	-	-	No	No	LED 7 Segment	6033000100
	LSLV0008S100-1EONNS	1	5	2	6	-	-	-	-	-	-	No			6033000200
	LSLV0015S100-1EONNS	2	8	3	10	-	-	-	-	-	-	No			---
	LSLV0022S100-1EONNS	3	11	5	12	-	-	-	-	-	-	No			---
Three Phase 200 ~ 240 VAC (-15% ~ +10%)	LSLV0004S100-2EONNS	0.5	2.5	1	3.1		2.2	1.5		3.0	1.8	No	No	LED 7 Segment	---
	LSLV0008S100-2EONNS	1	5	2	6	0.5	4.9	2.8	0.75	6.3	3.3				---
	LSLV0015S100-2EONNS	2	8	3	10	1	8.4	4.6	1	10.8	5.7				---
	LSLV0022S100-2EONNS	3	11	5	12	1.5	11.8	6.1	1.5	13.1	6.6				---
	LSLV0040S100-2EONNS	5.4	17	7.5	18	2	18.5	9.3	3	19.4	9.9				6030000600
	LSLV0055S100-2EONNS	7.5	24	10	30	3	25.8	13.0	5	32.7	16.0				---
	LSLV0075S100-2EONNS	10	32	15	40	5	34.9	18.0	7.5	44.2	22.0				---
	LSLV0110S100-2EONNS	15	46	20	56	7.5	50.8	26.0	10	62.3	31.0				6030000900
	LSLV0150S100-2EONNS	20	60	25	69	10	66.7	33.0	10	77.2	38.0				6030001000
Three Phase 380 ~ 480 VAC (-15% ~ +10%)	LSLV0004S100-4EONNS	0.5	1.3	1	2.0		1.1	0.8	0.5	2.0	1.3	No	No	LED 7 Segment	6031000100
	LSLV0008S100-4EONNS	1	2.5	2	3.1	0.5	2.4	1.5	0.75	3.3	1.9	No			6031000200
	LSLV0015S100-4EONNS	2	4	3	5.1	0.75	4.2	2.3	1	5.5	3.0	No			6031000300
	LSLV0022S100-4EONNS	3	5.5	5	6.9	1	5.9	3.1	2	7.5	3.9	No			6031000400
	LSLV0040S100-4EONNS	5.4	9	7.5	10	3	9.8	5.4	3	10.8	5.9	No			6031000600
	LSLV0055S100-4EOFNS	7.5	12	10	16	3	12.9	7.1	5	17.5	9.5	NO			6031000700
	LSLV0075S100-4EOFNS	10	16	15	23	5	17.5	9.5	7.5	25.4	14				6031000800
	LSLV0110S100-4EOFNS	15	24	20	30	7.5	26.5	15	10	33.4	18				6031000900
	LSLV0150S100-4EOFNS	20	30	25	38	10	33.4	18	15	42.5	23				6031001000
	LSLV0185S100-4EOFNS	25	39	30	44	10	43.6	23	15	49.5	27				6031001100
	LSLV0220S100-4EOFNS	30	45	40	58	15	50.7	27	20	65.7	35				6031001200
	LSLV0300S100-4CONDS	40	61	50	75	20	56	32	25	69	39	No	Yes	LCD	6031006000
	LSLV0370S100-4CONDS	50	75	60	91	25	69	39	30	85	47	No			6031006100
	LSLV0450S100-4CONDS	60	91	75	107	30	85	47	40	100	55	No			6031006200
	LSLV0550S100-4CONDS	75	110	100	142	40	103	57	50	134	73	No			6031001600
	LSLV0750S100-4CONDS	100	152	120	169	50	143	78	60	160	87				---

True NEMA 4X Available
230V: Up to 20HP
480V: Up to 100HP

NEMA 4X		UL Three Phase Ratings		UL Single Phase Ratings						
		Heavy-Duty 150% for 60 Seconds		Heavy-Duty(CT) Single Phase Input		HD (CT) 3 Phase Output Amps				
	MODEL #	HP	Amps	HP	Amps	Amps	EMC Filter	DC Reac-tor	Key-pad	Part #
Three Phase 200 ~ 240 VAC (-15% ~ +10%)	LSLV0004S100-2EXNNS,IP66	1/2	2.5		2.2	1.5	No	No	LED 7 Seg-ment	6030001800
	LSLV0008S100-2EXNNS,IP66	1	5	0.5	4.9	2.8				6030001900
	LSLV0015S100-2EXNNS,IP66	2	8	1	8.4	4.6				6030002000
	LSLV0022S100-2EXNNS,IP66	3	11	1.5	11.8	6.1				6030002100
	LSLV0037S100-2EXNNS,IP66	5	16	2	17.5	8.8				6030002200
	LSLV0055S100-2EXNNS,IP66	7.5	24	3	25.8	13.0				---
	LSLV0075S100-2EXNNS,IP66	10	32	5	34.9	18.0				6030002500
	LSLV0110S100-2EXNNS,IP66	15	46	7.5	50.8	26.0				6030002600
	LSLV0150S100-2EXNNS,IP66	20	60	10	66.7	33.0				6030002700
Three Phase 380 ~ 480 VAC (-15% ~ +10%)	LSLV0004S100-4EXNNS,IP66	1/2	1.3		1.1	0.8	No			---
	LSLV0008S100-4EXNNS,IP66	1	2.5	0.5	2.4	1.5	No			6031004300
	LSLV0015S100-4EXNNS,IP66	2	4	0.75	4.2	2.3	No			6031004400
	LSLV0022S100-4EXNNS,IP66	3	5.5	1	5.9	3.1	No			6031004500
	LSLV0037S100-4EXNNS,IP66	5	8	2	8.7	4.8	No			6031004600
	LSLV0055S100-4EXNNS,IP66	7.5	12	3	12.9	7.1	No			6031004800
	LSLV0075S100-4EXNNS,IP66	10	16	5	17.5	9.5	No			6031004900
	LSLV0110S100-4EXNNS,IP66	15	24	7.5	26.5	15.0	No			6031005000
	LSLV0150S100-4EXNNS,IP66	20	30	10	33.4	18.0	No			6031005100
	LSLV0185S100-4EXNNS,IP66	25	39	10	43.6	23.0	No			---
	LSLV0220S100-4EXNNS,IP66	30	45	15	50.7	27.0	No			---

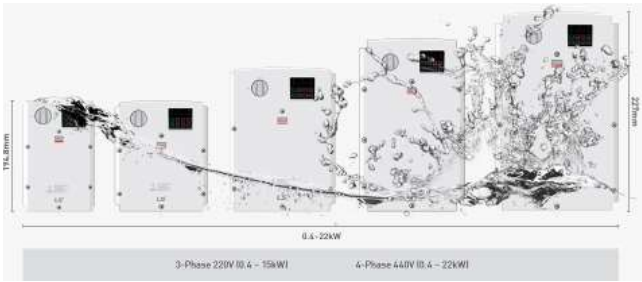

VFD's For PHASE CONVERSION 230V NEMA 1 (Can Also Be Used for 3PH 230V, Just Double The HP For Correct Part #)	
DESCRIPTION	PART #
10HP 3PH On 1PH Service	6120000900
15HP 3PH On 1PH Service	6120001000
20HP 3PH On 1PH Service	6120005200
25HP 3PH On 1PH Service	6120005300
30HP 3PH On 1PH Service	6120005400
40HP 3PH On 1PH Service	6120005500

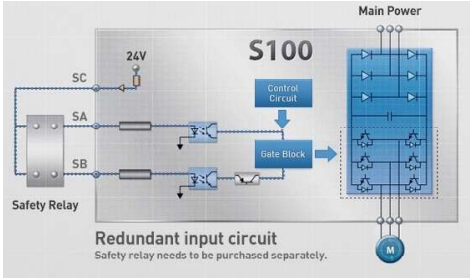

Description		Part #
Advanced Display for use with any S100 model (Need Remote Cable)		64110038
Cable Extension (Drive to KeyPad)		
2M Remote Cable	Remote Cable for the LCD Keypad	64110009
3M Remote Cable		---
RS232-RJ45 Cable		
232 to Etherport Port Cable	Required for PC Connection to Keypad Port (additional USB to RS232 Converter is Required)	76676236322
Communication Protocol Option		
INV,CANOpen for LSLV-S100		64150001
INV,Profibus-DP for LSLV-S100		64150002
INV,Ethernet IP & Modbus TCP for LSLV-S100		64150003
INV,EtherCAT for LSLV-S100		64150034
INV,Profinet for LSLV-S100		64150035
INV,Extension I/O for LSLV-S100 --> 3 Digital Inputs, 2 Digital Outputs, 1 Analog Output, 2 Analog Inputs		64150025
Heat Sink Out The Back		
S100 FLANGE MODULE A (1ph, 230V: 0.5HP / 3ph, 230V & 480V: 0.5-1HP) - For the Frame Size 1~2		64150013
S100 FLANGE MODULE B (1ph, 230V: 1-2HP / 3ph, 230V & 480V: 2-3HP) - For the Frame Size 4~5		64150014
S100 FLANGE MODULE C (1ph, 230V: 3HP / 3ph, 230V & 480V: 5-5.4HP) - For the Frame Size 7		64150015
S100 FLANGE MODULE D (3ph, 230V & 480V: 7.5-10HP) --> Same as H100 FLANGE MODULE D - For the Frame Size 9		64150016
S100 FLANGE MODULE E (3ph, 230V: 15HP / 480V: 15-20HP) --> Same as H100 FLANGE MODULE E - For the Frame Size 10		64150017
S100 FLANGE MODULE F (3ph, 230V: 20HP / 480V: 25-30HP) --> Same as H100 FLANGE MODULE F - For the Frame Size 11		64150018
S100 FLANGE MODULE G (3ph, 480V: 40HP) --> Same as H100 FLANGE MODULE G - For the Frame Size 12		64150019
S100 FLANGE MODULE H (3ph, 480V: 50-60HP) --> Same as H100 FLANGE MODULE H - For the Frame Size 13		64150020
S100 FLANGE MODULE I (3ph, 480V: 75-100HP) --> Same as H100 FLANGE MODULE I - For the Frame Size 14		64150021
S100 FLANGE MODULE J (1ph, 230V: 0.5HP S100 with Built-in EMC Filter / 480V: 0.5-1HP S100 with Built-in EMC Filter) - For the Frame Size 3		64150031
S100 FLANGE MODULE K (1ph, 230V: 1~2HP S100 with Built-in EMC Filter / 480V: 2~3HP S100 with Built-in EMC Filter) - For the Frame Size 6		64150032
S100 FLANGE MODULE L (1ph, 230V: 3HP S100 with Built-in EMC Filter / 480V: 5~5.4HP S100 with Built-in EMC Filter) - For the Frame Size 8		64150033
NEMA 1 Conduit Kit		
S100 CONDUIT MODULE A (1ph, 230V: 0.5HP / 3ph, 230V & 480V: 0.5-1HP) - For the Frame Size 1~2		64150004
S100 CONDUIT MODULE B (1ph, 230V: 1-2HP / 3ph, 230V & 480V: 2-3HP) - For the Frame Size 4~5		64150005
S100 CONDUIT MODULE C (1ph, 230V: 3HP / 3ph, 230V & 480V: 5-5.4HP) - For the Frame Size 7		64150006
S100 CONDUIT MODULE D (3ph, 230V & 480V: 7.5-10HP) --> Same as C100 CONDUIT MODULE D - For the Frame Size 9		---
S100 CONDUIT MODULE E (3ph, 230V: 15HP / 480V: 15-20HP) - For the Frame Size 10		64150008
S100 CONDUIT MODULE F (3ph, 230V: 20HP / 480V: 25-30HP) - For the Frame Size 11		64150009
S100 CONDUIT MODULE G (3ph, 480V: 40HP) --> Same as H100 CONDUIT MODULE G - For the Frame Size 12		64150010
S100 CONDUIT MODULE H (3ph, 480V: 50-60HP) --> Same as H100 CONDUIT MODULE H - For the Frame Size 13		64150011
S100 CONDUIT MODULE I (3ph, 480V: 75-100HP) --> Same as H100 CONDUIT MODULE I - For the Frame Size 14		64150012
S100 CONDUIT MODULE J (1ph, 230V: 0.5HP S100 with Built-in EMC Filter / 480V: 0.5-1HP S100 with Built-in EMC Filter) - For the Frame Size 3		64150028
S100 CONDUIT MODULE K (1ph, 230V: 1~2HP S100 with Built-in EMC Filter / 480V: 2~3HP S100 with Built-in EMC Filter) - For the Frame Size 6		64150029
S100 CONDUIT MODULE L (1ph, 230V: 3HP S100 with Built-in EMC Filter / 480V: 5~5.4HP S100 with Built-in EMC Filter) - For the Frame Size 8		64150030

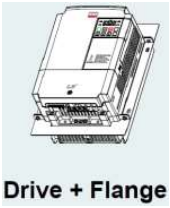

	UL Three Phase ratings					UL Single Phase Rat										
	Heavy Duty 150% for 60 seconds		Normal Duty 120% for 60 seconds			Heavy Duty (CT) Single Phase		Norm (V Single								
	HP	Amps	HP	Amps	HP	Amps (Out)	HP	Amps (Out)	Frame Size	Built-in 7seg. Keypad	Remote Cable Capability	Frame Size	Width (inch)	Height (inch)	Depth (inch)	Part #
Three Phase 200 ~ 240 VAC (-15% ~ +10%)	1/2	2.5	1	3.1	-	1.5	-	2.0	1	Yes	Yes	1	3.4"	6.5"	5.5"	6040000100
	1	5.0	2	6.0	1/2	2.8	3/4	3.6	1							6040000200
	2	8.0	3	9.6	1	4.6	1	5.9	2			2	4"	7"	6.3"	6040000300
	3	11.0	5	12.0	1.5	6.1	1.5	6.7	2							6040000400
	5	17.0	7.5	18.0	2	9.3	3	9.8	3			3	5.3"	7.6"	6.3"	6040000600
	7.5	24.0	10	30.0	3	12.8	5	16.3	4			4	7.1"	9.5"	6"	6040000700
	10	32.0	15	40.0	5	17.4	7.5	22.0	4							6040000800
Three Phase 380 ~ 480 VAC (-15% ~ +10%)	1/2	1.3	1	2.0	-	0.7	1/2	1.3	1	Yes	Yes	1	3.4"	6.5"	5.5"	6041002100
	1	2.5	2	3.1	1/2	1.4	3/4	1.9	1							6041002200
	2	4.0	3	5.1	1	2.1	1	2.8	2			2	4"	7"	6.3"	6041002300
	3	5.5	5	6.9	1	2.8	2	3.6	2							6041002400
	5	9.0	7.5	10.0	3	4.9	3	5.4	3			3	5.3"	7.6"	6.3"	6041002600
	7.5	12.0	10	16.0	3	6.4	5	8.7	4			4	7.1"	9.5"	6"	6041002700
	10	16.0	15	23.0	5	8.7	7.5	12.6	4							6041002800

LS IS

G100

- UL 61800-5-1 Design
- Din-rail mountable
- MIL217 Plus Reliability Design
- Built in Rotary Potentiometer
- Embedded C3 EMC Filter (for 480V)
- Starting torque of 200% at 0.5hz
- HD operation: - 10 - 50°C
- IP20 / UL Type 1 Kit

Cable Extension (drive to keypad)

Length	Comment	Stock Class	Part #
1M	Includes Frame Kit + 7segment Keypad for installation on the door	S	64180001
2M			64180002
3M			64180003
5M			64180004

NEMA 1 Conduit Kit

Applicable Range	Stock Class	Part #
G100 CONDUIT MODULE A (0.5~1hp)	S	64180005
G100 CONDUIT MODULE B (2~3hp)		64180006
G100 CONDUIT MODULE C (5hp)		64180007
G100 CONDUIT MODULE D (7.5~10hp)		64180008

Communication Protocol Option

Protocol	Stock Class	Part #
G100 Ethernet IP (Dual port)	S	64180009

USB to RS485 Cable

Basic Description	Stock Class	Part #
USB to RS485 Port Cable (for M100, G100 series)	S	64090354

Soft Starts are electronic starters designed to accelerate, decelerate and protect three-phase induction motors, controlling the voltage applied on the motor.

MODEL SSW05 FEATURES:

- Current: 3 to 85A
- Voltage: 220 to 575V
- Built-In By-Pass
- Digital Signal Processor (DSP) Control
- Remote HMI (optional)
- Built-In Motor Protections
- Reduction Of Stress On Couplings And Other Transmission Devices During Starting (gearboxes, sheaves, conveyors)
- Extended Lifetime Of Motor And Mechanical Shocks
- Easy Operation, Programming And Maintenance
- Simple Electrical Wiring
- Operation IN Environments Up To 122 °F (55 °C) Without Current Loss

MODEL SSW05 - 230V

HP	PART #
3	SSW05-3-230
5	SSW05-5-230
7.5	SSW05-7.5-230
10	SSW05-10-230
15	SSW05-15-230
20	SSW05-20-230
30	SSW05-30-230

MODEL SSW05 - 480V

HP	PART #
5	SSW05-5-480
10	SSW05-10-480
15	SSW05-15-480
20	SSW05-20-480
30	SSW05-30-480
40	SSW05-40-480
60/75	---

MODEL SSW07 - 230V

HP	PART #
5	SSW07-5-230
7.5	SSW07-7.5-230
10	SSW07-10-230
15	SSW07-15-230
20	---
30	SSW07-30-230
40/50	SSW07-40-230
60	SSW07-60-230
75	SSW07-75-230
100	SSW07-100-230
125	SSW07-125-230

MODEL SSW07 FEATURES:

- Designed For High Performance W/ Excellent Cost-Benefit Ratio
- Easy Setup, Operation and Maintenance
- Compact, Optimizing Space In Electric Panels
- Keypad, Communication Interface Or A Motor PTC Input Can Be Added
- Designed For Industrial And Professional Use
- Kick-Start Function For Starting High Breakaway Torque Loads
- Limitation Of Voltage During Start
- Universal Voltage (22 to 575VAC)
- Switched Mode Power Supply With EMC Filter For The Control Electronics (110 to 240VAC)
- Built-In Bypass Providing Size Reduction And Energy Savings
- Voltage Monitoring Of The Electronics Allows To Backup 1 x t Values 9Thermal Image)

MODEL SSW07 - 480V

HP	PART #
10	SSW07-10-480
15	SSW07-15-480
20	SSW07-20-480
30	SSW07-30-480
50	SSW07-50-480
75	SSW07-75-480
100	SSW07-100-480
125	SSW07-125-480
150	SSW07-150-480

9 - CHAIN & SPROCKETS

Sprockets 2-7
Roller & Conveyor Chain 8-10

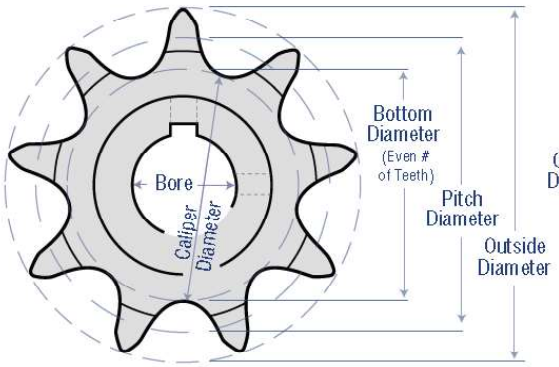

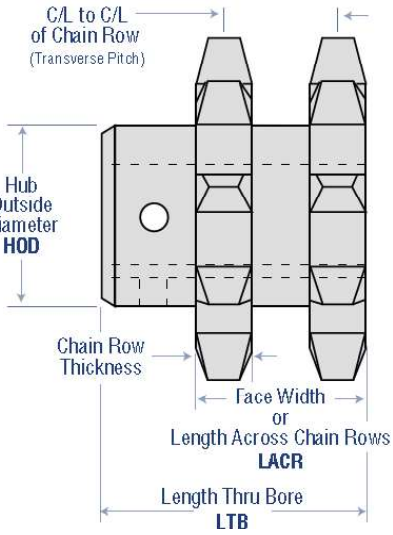

D 160 B 16 H 2 1/4

# of Strands

Blank Single
- **D** Double
- **E** Triple
- **F** Quadruple
- **DS** Double Single

Chain Pitch (measured in eighths)

25 = 2/8 = 1/4"	**60** = 6/8 = 3/4"	**160** = 16/8 = 2"
35 = 3/8 = 3/8"	**80** = 8/8 = 1"	**180** = 18/8 = 2 1/4"
40 = 4/8 = 1/2"	**100** = 10/8 = 1 1/4"	**200** = 20/8 = 2 1/2"
41 = 4/8 = 1/2"	**120** = 12/8 = 1 1/2"	**240** = 24/8 = 3"
50 = 5/8 = 5/8"	**140** = 14/8 = 1 3/4"	

Special Instructions

- **H** Hardened Teeth
- **SS** Stainless Steel

# of Teeth

Bore Size

Sprocket Type

A	Plate Only	**JA, SH,...**	QD
B	Hub One Side	**BTB**	Taper Bushed
C	Hub Both Sides	**H, P, Q,...**	MST®
D	Detachable Hubs	**BS**	Bored-To-Size

Types of Sprockets

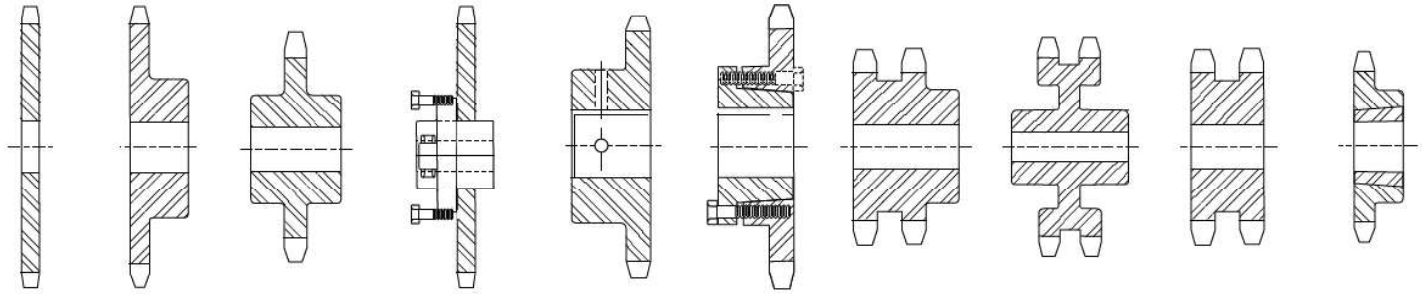

Single Type A No Hub Ex: 25A40 | Single Type B Hub One Side Ex: 35B20 | Single Type C Hub Both Sides Ex: 60C17 | Single Type D Detachable Hub Ex: 100D30 | Type BS Bored-to-Size Ex: 50BS16 1 | Single QD Ex: 35SH40 | Double Type B Ex: D35B19H | Double Type C Ex: D60C72 | Double Single Ex: DS40A19 | Single Taper Bushed Type B Ex: 50BTB16

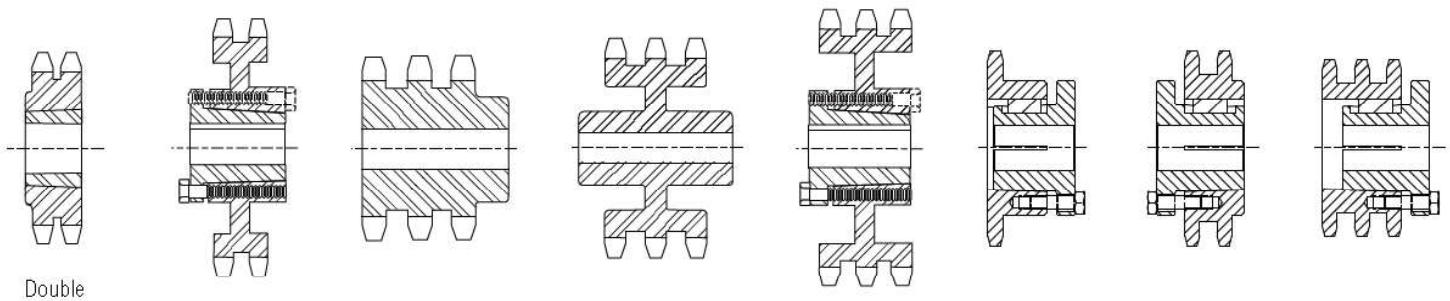

Double Taper Bushed Ex: D50BTB21 | Double QD Ex: D80E52 | Triple Type B Ex: E60B12 | Triple Type C Ex: E60C72 | Triple QD Ex: E60E68 | Single MST® Ex: 50P24 | Double MST® Ex: D80R60 | Triple MST® Ex: E60Q21

FINISHED BORE SPROCKETS

All sprockets include standard keyway, 2 setscrews and have hardened teeth

Sprocket #
Identification Example:
60 BS 12 H - 1

- 1 — Bore Size
- H — Hardened Teeth
- 12 — Number of Teeth
- BS — Bored to Size
- 60 — Chain Size

#40 CHAIN SPROCKETS

TEETH	BORE	O.D.	PART #
9	1/2	1-1/2"	40BS9H-1/2
	5/8	1-5/8"	40BS9H-5/8
10	1/2	1-7/8"	40BS10H-1/2
	5/8	1-7/8"	40BS10H-5/8
	3/4	1-7/8"	40BS10H-3/4
11	1/2	2"	40BS11H-1/2
	5/8	2"	40BS11H-5/8
	3/4	2"	40BS11H-3/4
	7/8	2"	40BS11H-7/8
12	1/2	2-3/16"	40BS12H-1/2
	5/8	2-3/16"	40BS12H-5/8
	3/4	2-3/16"	40BS12H-3/4
	7/8	2-3/16"	40BS12H-7/8
	1	2-3/16"	40BS12H-1
13	1-2	2-5/16"	40BS13H-1/2
	5/8	2-5/16"	40BS13H-5/8
	3/4	2-5/16"	40BS13H-3/4
	7/8	2-5/16"	40BS13H-7/8
	1	2-5/16"	40BS13H-1
14	1-1/2	2-1/2"	40BS14H-1/2
	5/8	2-1/2"	40BS14H-5/8
	3/4	2-1/2"	40BS14H-3/4
	7/8	2-1/2"	40BS14H-7/8
	1	2-1/2"	40BS14H-1
15	1/2	2-5/8"	40BS15H-1/2
	5/8	2-5/8"	40BS15H-5/8
	3/4	2-5/8"	40BS15H-3/4
	7/8	2-5/8"	40BS15H-7/8
	1	2-5/8"	40BS15H-1
16	1	2-13/16"	40BS16H-1/2
	5/8	2-13/16"	40BS16H-5/8
	3/4	2-13/16"	40BS16H-3/4
	7/8	2-13/16"	40BS16H-7/8
	1	2-13/16"	40BS16H-1
	1-1/8	2-13/16"	40BS16H-1-1/8
	1-1/4	2-13/16"	40BS16H-1-1/4

Call for pricing and availability for other sizes not listed

TEETH	BORE	O.D.	PART #
17	1/2	3"	40BS17H-1/2
	5/8	3"	40BS17H-5/8
	3/4"	3"	40BS17H-3/4
	7/8"	3"	40BS17H-7/8
	1"	3"	40BS17H-1
	1-1/8"	3"	40BS17H-1-1/8
	1-1/4"	3"	40BS17H-1-1/4
18	5/8"	3-1/8"	40BS18H-5/8
	3/4"	3-1/8"	40BS18H-3/4
	7/8"	3-1/8"	40BS18H-7/8
	1"	3-1/8"	40BS18H-1
	1-1/8"	3-1/8"	40BS18H-1-1/8
	1-1/4"	3-1/8"	40BS18H-1-1/4
19	5/8"	3-5/16"	40BS19H-5/8
	3/4"	3-5/16"	40BS19H-3/4
	7/8"	3-5/16"	40BS19H-7/8
	1"	3-5/16"	40BS19H-1
	1-1/8"	3-5/16"	40BS19H-1-1/8
20	5/8"	3-7/16"	40BS20H-5/8
	3/4"	3-7/16"	40BS20H-3/4
	7/8"	3-7/16"	40BS20H-7/8
	1"	3-7/16"	40BS20H-1
	1-1/8"	3-7/16"	40BS20H-1-1/8
	1-1/4"	3-7/16"	40BS20H-1-1/4
21	3/4"	3-5/8"	40BS21H-3/4
	7/8"	3-5/8"	40BS21H-7/8
	1"	3-5/8"	40BS21H-1
	1-1/8"	3-5/8"	40BS21H-1-1/8
	1-1/4"	3-5/8"	40BS21H-1-1/4
22	3/4"	3-3/4"	40BS22H-3/4
	7/8"	3-3/4"	40BS22H-7/8
	1"	3-3/4"	40BS22H-1
	1-1/8"	3-3/4"	40BS22H-1-1/8
	1-1/4"	3-3/4"	40BS22H-1-1/4
23	3/4"	4"	40BS23H-3/4
	7/8"	4"	40BS23H-7/8
	1"	4"	40BS23H-1
	1-1/8"	4"	40BS23H-1-1/8
	1-1/4"	4"	40BS23H-1-1/4
24	3/4"	4-1/8"	40BS24H-3/4
	7/8"	4-1/8"	40BS24H-7/8
	1"	4-1/8"	40BS24H-1
	1-1/8"	4-1/8"	40BS24H-1-1/8
	1-1/4"	4-1/8"	40BS24H-1-1/4

#50 CHAIN SPROCKETS

TEETH	BORE	O.D.	PART #
9	1/2"	2-1/8"	50BS9H-1/2
	5/8"	2-1/8"	50BS9H-5/8
10	5/8"	2-5/16"	50BS10H-5/8
	3/4"	2-5/16"	50BS10H-3/4
	1"	2-5/16"	50BS10H-1
11	5/8"	2-1/2"	50BS11H-5/8
	3/4"	2-1/2"	50BS11H-3/4
	7/8"	2-1/2"	50BS11H-7/8
	1"	2-1/2"	50BS11H-1
12	5/8"	2-3/4"	50BS12H-5/8
	3/4"	2-3/4"	50BS12H-3/4
	7/8"	2-3/4"	50BS12H-7/8
	1"	2-3/4"	50BS12H-1
	1-1/8"	2-3/4"	50BS12H-1-1/8
	1-1/4"	2-3/4"	50BS12H-1-1/4
13	5/8"	2-7/8"	50BS13H-5/8
	3/4"	2-7/8"	50BS13H-3/4
	7/8"	2-7/8"	50BS13H-7/8
	1"	2-7/8"	50BS13H-1
	1-1/8"	2-7/8"	50BS13H-1-1/8
	1-1/4"	2-7/8"	50BS13H-1-1/4
14	5/8"	3-1/8"	50BS14H-5/8
	3/4"	3-1/8"	50BS14H-3/4
	7/8"	3-1/8"	50BS14H-7/8
	1"	3-1/8"	50BS14H-1
	1-1/8"	3-1/8"	50BS14H-1-1/8
	1-1/4"	3-1/8"	50BS14H-1-1/4
	1-1/2"	3-1/8"	50BS14H-1-1/2
15	3/4"	3-1/4"	50BS15H-3/4
	7/8"	3-1/4"	50BS15H-7/8
	1"	3-1/4"	50BS15H-1
	1-1/8"	3-1/4"	50BS15H-1-1/8
	1-1/4"	3-1/4"	50BS15H-1-1/4
	1-3/8"	3-1/4"	50BS15H-1-3/8
	1-1/2"	3-1/4"	50BS15H-1-1/2
16	3/4"	3-1/2"	50BS16H-3/4
	7/8"	3-1/2"	50BS16H-7/8
	1"	3-1/2"	50BS16H-1
	1-1/8"	3-1/2"	50BS16H-1-1/8
	1-1/4"	3-1/2"	50BS16H-1-1/4
	1-3/8"	3-1/2"	50BS16H-1-3/8
	1-1/2"	3-1/2"	50BS16H-1-1/2

TEETH	BORE	O.D.	PART #
17	5/8"	3-11/16"	50BS17H-5/8
	3/4"	3-11/16"	50BS17H-3/4
	7/8"	3-11/16"	50BS17H-7/8
	1"	3-11/16"	50BS17H-1
	1-1/4"	3-11/16"	50BS17H-1-1/4
18	3/4"	3-15/16"	50BS18H-3/4
	7/8"	3-15/16"	50BS18H-7/8
	1"	3-15/16"	50BS18H-1
	1-1/8"	3-15/16"	50BS18H-1-1/8
	1-1/4"	3-15/16"	50BS18H-1-1/4
	1-3/8"	3-15/16"	50BS18H-1-3/8
	1-1/2"	3-15/16"	50BS18H-1-1/2
19	3/4"	4-1/8"	50BS19H-3/4
	7/8"	4-1/8"	50BS19H-7/8
	1"	4-1/8"	50BS19H-1
	1-1/8"	4-1/8"	50BS19H-1-1/8
	1-1/4"	4-1/8"	50BS19H-1-1/4
20	3/4"	4-15/16"	50BS20H-3/4
	7/8"	4-15/16"	50BS20H-7/8
	1"	4-15/16"	50BS20H-1
	1-1/4"	4-15/16"	50BS20H-1-1/4
	1-3/8"	4-15/16"	50BS20H-1-3/8
	1-1/2"	4-15/16"	50BS20H-1-1/2
21	3/4"	4-9/16"	50BS21H-3/4
	7/8"	4-9/16"	50BS21H-7/8
	1"	4-9/16"	50BS21H-1
	1-1/4"	4-9/16"	50BS21H-1-1/4
22	3/4"	4-3/4"	50BS22H-3/4
	7/8"	4-3/4"	50BS22H-7/8
	1"	4-3/4"	50BS22H-1
	1-1/4"	4-3/4"	50BS22H-1-1/4
23	3/4"	5"	50BS23H-3/4
	7/8"	5"	50BS23H-7/8
	1"	5"	50BS23H-1
	1-1/4"	5"	50BS23H-1-1/4
24	3/4"	5-1/8"	50BS24H-3/4
	7/8"	5-1/8"	50BS24H-7/8
	1"	5-1/8"	50BS24H-1
	1-1/4"	5-1/8"	50BS24H-1-1/4

FINISHED BORE SPROCKETS

All sprockets include standard keyway, 2 setscrews and have hardened teeth

#60 CHAIN SPROCKETS

TEETH	BORE	O.D.	PART #
9	5/8"	2-1/2"	60BS9H-5/8
	3/4"	2-1/2"	60BS9H-3/4
	7/8"	2-1/2"	60BS9H-7/8
	1"	2-1/2"	60BS9H-1
10	5/8"	2-3/4"	60BS10H-5/8
	3/4"	2-3/4"	60BS10H-3/4
	7/8"	2-3/4"	60BS10H-7/8
	1"	2-3/4"	60BS10H-1
	1-1/8"	2-3/4"	60BS10H-1-1/8
	1-1/4"	2-3/4"	60BS10H-1-1/4
11	5/8"	3"	60BS11H-5/8
	3/4"	3"	60BS11H-3/4
	7/8"	3"	60BS11H-7/8
	1"	3"	60BS11H-1
	1-1/4"	3"	60BS11H-1-1/4
12	5/8"	3-1/4"	60BS12H-5/8
	3/4"	3-1/4"	60BS12H-3/4
	7/8"	3-1/4"	60BS12H-7/8
	1"	3-1/4"	60BS12H-1
	1-1/8"	3-1/4"	60BS12H-1-1/8
	1-1/4"	3-1/4"	60BS12H-1-1/4
	1-1/2"	3-1/4"	60BS12H-1-1/2
13	5/8"	3-1/2"	60BS13H-5/8
	3/4"	3-1/2"	60BS13H-3/4
	7/8"	3-1/2"	60BS13H-7/8
	1"	3-1/2"	60BS13H-1
	1-1/8"	3-1/2"	60BS13H-1-1/8
	1-1/4"	3-1/2"	60BS13H-1-1/4
	1-3/8"	3-1/2"	60BS13H-1-3/8
	1-1/2"	3-1/2"	60BS13H-1-1/2

TEETH	BORE	O.D.	PART #
14	5/8"	3-3/4"	60BS14H-5/8
	3/4"	3-3/4"	60BS14H-3/4
	7/8"	3-3/4"	60BS14H-7/8
	1"	3-3/4"	60BS14H-1
	1-1/8"	3-3/4"	60BS14H-1-1/8
	1-1/4"	3-3/4"	60BS14H-1-1/4
	1-1/2"	3-3/4"	60BS14H-1-1/2
	1-3/4"	3-3/4"	60BS14H-1-3/4
15	5/8"	4"	60BS15H-5/8
	3/4"	4"	60BS15H-3/4
	7/8"	4"	60BS15H-7/8
	1"	4"	60BS15H-1
	1-1/8"	4"	60BS15H-1-1/8
	1-1/4"	4"	60BS15H-1-1/4
	1-3/8"	4"	60BS15H-1-3/8
	1-1/2"	4"	60BS15H-1-1/2
	1-3/4"	4"	60BS15H-1-3/4
16	5/8"	4-1/4"	60BS16H-5/8
	3/4"	4-1/4"	60BS16H-3/4
	7/8"	4-1/4"	60BS16H-7/8
	1"	4-1/4"	60BS16H-1
	1-1/8"	4-1/4"	60BS16H-1-1/8
	1-1/4"	4-1/4"	60BS16H-1-1/4
	1-1/2"	4-1/4"	60BS16H-1-1/2
	1-3/4"	4-1/4"	60BS16H-1-3/4
17	5/8"	4-1/2"	60BS17H-5/8
	3/4"	4-1/2"	60BS17H-3/4
	7/8"	4-1/2"	60BS17H-7/8
	1"	4-1/2"	60BS17H-1
	1-1/4"	4-1/2"	60BS17H-1-1/4
	1-3/8"	4-1/2"	60BS17H-1-3/8
	1-1/2"	4-1/2"	60BS17H-1-1/2
	2"	4-1/2"	60BS17H-2

TEETH	BORE	O.D.	PART #
18	5/8"	4-11/16"	60BS18H-5/8
	3/4"	4-11/16"	60BS18H-3/4
	7/8"	4-11/16"	60BS18H-7/8
	1"	4-11/16"	60BS18H-1
	1-1/8"	4-11/16"	60BS18H-1-1/8
	1-1/4"	4-11/16"	60BS18H-1-1/4
	1-3/8"	4-11/16"	60BS18H-1-3/8
	1-1/2"	4-11/16"	60BS18H-1-1/2
	1-3/4"	4-11/16"	60BS18H-1-3/4
	2"	4-11/16"	60BS18H-2
19	3/4"	5"	60BS19HX-3/4
	7/8"	5"	60BS19HX-7/8
	1"	5"	60BS19H-1
	1-1/8"	5"	60BS19HX-1-1/8
	1-1/4"	5"	60BS19HX-1-1/4
	1-7/16"	5"	60BS19HX-1-7/16
	1-1/2"	5"	60BS19HX-1-1/2
	1-3/4"	5"	60BS19H-1-3/4
20	3/4"	5-3/16"	60BS20H-3/4
	7/8"	5-3/16"	60BS20H-7/8
	1"	5-3/16"	60BS20H-1
	1-1/4"	5-3/16"	60BS20H-1-1/4
	1-1/2"	5-3/16"	60BS20H-1-1/2
	1-3/4"	5-3/16"	60BS20H-1-3/4
	2"	5-3/16"	60BS20H-2
21	3/4"	5-1/2"	60BS21HX-3/4
	7/8"	5-1/2"	60BS21HX-7/8
	1"	5-1/2"	60BS21HX-1
	1-1/4"	5-1/2"	60BS21HX-1-1/4
22	3/4"	5-11/16"	60BS22HX-3/4
	7/8"	5-11/16"	60BS22HX-7/8
	1"	5-11/16"	60BS22HX-1
	1-1/4"	5-11/16"	60BS22HX1-1/4
23	3/4"	6"	60BS23HX-3/4
	7/8"	6"	60BS23HX-7/8
	1"	6"	60BS23HX-1
	1-1/4"	6"	60BS23HX-1-1/4
24	3/4"	6-1/8"	60BS24HX-3/4
	7/8"	6-1/8"	60BS24HX-7/8
	1"	6-1/8"	60BS24HX-1
	1-1/4"	6-1/8"	60BS24HX-1-1/4

Sprocket #
Identification Example:

60 BS 12 H - 1

- 1 — Bore Size
- H — Hardened Teeth
- 12 — Number of Teeth
- BS — Bored to Size
- 60 — Chain Size

FINISHED BORE SPROCKETS

All sprockets include standard keyway, 2 setscrews and have hardened teeth

Sprocket #
Identification Example:
60 BS 12 H - 1
- Bore Size
- Hardened Teeth
- Number of Teeth
- Bored to Size
- Chain Size

FINISHED BORE SPROCKETS

All sprockets include standard keyway, 2 setscrews and have hardened teeth

#80 CHAIN SPROCKETS

TEETH	BORE	O.D.	PART #
9	1"	3-3/8"	80BS9HX-1
	1-1/8"	3-3/8"	80BS9HX-1-1/8
	1-1/4"	3-3/8"	80BS9HX-1-1/4
10	1"	3-5/8"	80BS10HX-1
	1-1/8"	3-5/8"	80BS10HX-1-1/8
	1-1/4"	3-5/8"	80BS10HX-1-1/4
	1-3/8"	3-5/8"	80BS10HX-1-3/8
11	1"	4"	80BS11HX-1
	1-1/8"	4"	80BS11HX-1-1/8
	1-1/4"	4"	80BS11HX-1-1/4
12	1"	4-3/8"	80BS12HX-1
	1-1/8"	4-3/8"	80BS12HX-1-1/8
	1-1/4"	4-3/8"	80BS12HX-1-1/4
	1-3/8"	4-3/8"	80BS12HX-1-3/8
	1-1/2"	4-3/8"	80BS12HX-1-1/2
13	1"	4-5/8"	80BS13HX-1
	1-1/8"	4-5/8"	80BS13HX-1-1/8
	1-1/4"	4-5/8"	80BS13HX-1-1/4
	1-7/16"	4-5/8"	80BS13HX-1-7/16
	1-1/2"	4-5/8"	80BS13HX-1-1/2
14	1"	5"	80BS14HX-1
	1-1/8"	5"	80BS14HX-1-1/8
	1-1/4"	5"	80BS14HX-1-1/4
	1-3/8"	5"	80BS14HX-1-3/8
	1-7/16"	5"	80BS14HX-1-7/16
	1-1/2"	5"	80BS14HX-1-1/2
15	1"	5-3/8"	80BS15HX-1
	1-1/8"	5-3/8"	80BS15HX-1-1/8
	1-1/4"	5-3/8"	80BS15HX-1-1/4
	1-3/8"	5-3/8"	880BS15HX-1-3/8
	1-7/16"	5-3/8"	80BS15HX-1-7/16
	1-1/2"	5-3/8"	80BS15HX-1-1/2

TEETH	BORE	O.D.	PART #
16	1"	5-3/8"	80BS16HX-1
	1-1/4"	5-5/8"	80BS16HX-1-1/4
	1-7/16"	5-5/8"	80BS16HX-1-7/16
	1-1/2"	5-5/8"	80BS16HX-1-1/2
17	1"	6"	80BS17HX-1
	1-1/4"	6"	80BS17HX-1-1/4
	1-7/16"	6"	80BS17HX-1-7/16
	1-1/2"	6"	80BS17HX-1-1/2
18	1"	6-1/4"	80BS18HX-1
	1-1/4"	6-1/4"	80BS18HX-1-1/4
	1-7/16"	6-1/4"	80BS18HX-1-7/16
	1-1/2"	6-1/4"	80BS18HX-1-1/2
19	1"	6-1/2"	80BS19HX-1
	1-1/4"	6-1/2"	80BS19HX-1-1/4
	1-7/16"	6-1/2"	80BS19HX-1-7/16
	1-1/2"	6-1/2"	80BS19HX-1-1/2
20	1"	7"	80BS20HX-1
	1-1/4"	7"	80BS20HX-1-1/4
	1-7/16"	7"	80BS20HX-1-7/16
	1-1/2"	7"	80BS20HX-1-1/2

QD-BUSHED SPROCKETS

Call for pricing and availability on other sprockets not listed

#40 CHAIN	
PART #	O.D.
40JA15H	2 5/8"
40JA16H	2 11/16"
40JA17H	3"
40JA18H	3 1/8"
40JA19H	3 5/16"
40SH20H	3 7/16"
40SH21H	3 5/8"
40SH22H	3 3/4"
40SH23H	4"
40SH24H	4 1/16"
40SH25H	4 3/16"
40SH26H	4 3/8"
40SH27H	4 1/2"
40SH28H	4 11/16"
40SH30H	5 1/16"
40SH32H	5 3/8"
40SH35H	5 11/16"
40SH36H	6"
40SDS40	6 5/8"
40SDS42	7"
40SDS45	7 1/2"
40SDS48	8"
40SDS54	8 7/8"
40SDS60	9 3/16"
40SK70	11"
40SK72	11 3/16"
40SK80	12 15/16"
40SK96	15 1/2"
40SK112	17 13/16"

#50 CHAIN	
PART #	O.D.
50JA12H	2 3/4"
50JA13H	2 7/8"
50JA14H	3 1/16"
50JA15H	3 1/4"
50JA16H	3 7/16"
50SH17H	3 11/16"
50SH18H	3 7/8"
50SH19H	4 1/8"
50SDS20H	4 3/8"
50SDS21H	4 9/16"
50SDS22H	4 3/4"
50SDS23H	4 15/16"
50SDS24H	5 1/8"
50SDS25H	5 3/8"
50SDS26H	5 1/2"
50SDS27H	5 11/16"
50SDS28H	5 7/8"
50SDS30H	6 5/16"
50SDS32H	6 3/4"
50SDS35	7 1/4"
50SDS36	7 9/16"
50SDS40	8 5/16"
50SDS42	8 11/16"
50SDS45	9 5/16"
50SDS48	9 7/8"
50SK54	11 1/16"
50SK60	12 5/16"
50SK70	14 1/4"
50SK72	14 5/8"
50SF80	16 1/4"
50SF84	17"
50SF96	19 1/2"
50SF112	22 5/8"

#60 CHAIN	
PART #	O.D.
60JA11H	3"
60JA12H	3 1/4"
60JA13H	3 1/2"
60SH14H	3 3/4"
60SH15H	4"
60SH16H	4 1/4"
60SDS17H	4 1/2"
60SDS18H	4 11/16"
60SDS19H	5"
60SDS20H	5 1/8"
60SDS21H	5 1/2"
60SDS22H	5 11/16"
60SDS23H	5 15/16"
60SDS24H	6 1/8"
60SDS25H	6 3/8"
60SK26H	6 5/8"
60SK27H	6 7/8"
60SK28H	7 1/8"
60SK30H	7 5/8"
60SK32	8"
60SK35	8 13/16"
60SK36	9"
60SK40	9 15/16"
60SF42	10 1/2"
60SF45	11 3/16"
60SF48	11 7/8"
60SF54	13 1/4"
60SF60	14 3/4"
60SF70	17 3/16"
60SF72	17 5/8"
60SF80	19 1/2"
60SF84	20 1/2"
60SF96	23 3/8"
60SF112	27 3/16"

#80 CHAIN	
PART #	O.D.
80SH11H	4"
80SH12H	4 3/8"
80SDS13H	4 5/8"
80SDS14H	5"
80SK15H	5 1/4"
80SK16H	5 5/8"
80SK17H	6"
80SK18H	6 5/16"
80SK19H	6 9/16"
80SF20H	6 15/16"
80SF22H	7 9/16"
80SF24H	8 3/16"
80SF26H	8 13/16"
80SF28H	9 3/8"
80SF30H	10 1/8"
80SF35H	11 3/4"
80SF36H	12"
80SF40	13 5/16"
80SF42	13 15/16"
80SF45	14 7/8"
80SF48	15 7/8"
80SF54	17 3/4"
80SF60	19 5/8"

Find BUSHINGS in
Bushings & Bushings
Section

Sprocket #
Identification Example:
60 SK 30 H

- H — Hardened Teeth
- 30 — Number of Teeth
- SK — Bushing Type Required
- 60 — Chain Size

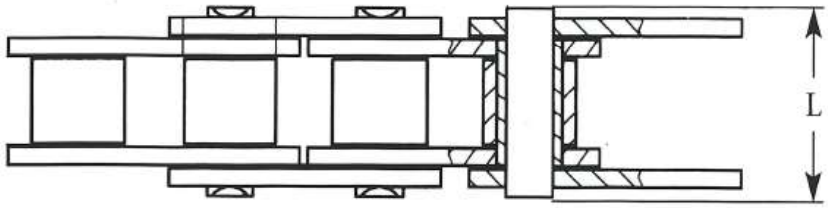

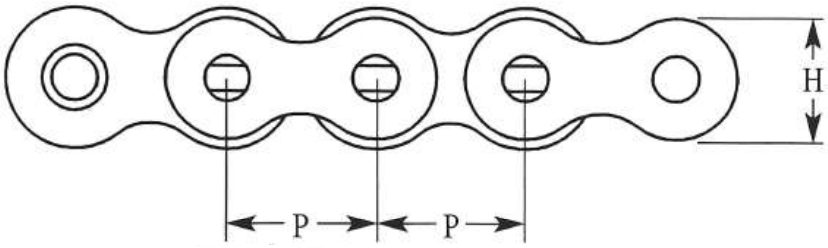

Connecting Link
Spring Clip Type (C/L)

Offset Link Single
Pitch (O/S)

ANSI SINGLE STRAND

#	PITCH	OVERALL WIDTH	HEIGHT
	P	L	H
25	1/4"	.388"	.228"
35	3/8"	.514"	.346"
40	1/2"	.703"	.469"
41	1/2"	.573"	.390"
50	5/8"	.868"	.585"
60	3/4"	1.065"	.673"
80	1"	1.348"	.949"
100	1-1/4"	1.677"	1.188"
120	1-1/2"	2.118"	1.425"
140	1-3/4"	2.307"	1.663"
160	2"	2.75"	1.901"
200	2-1/2"	3.34"	2.375"

ANSI SINGLE STRAND
ROLLER CHAIN and LINKS

* IMPORT *

#	CHAIN	C/L LINK	O/L LINK
	PART #	PART #	PART #
25	Chain-R 25-1 -10 (I)	Chain-R 25-1 C/L (I)	Chain-R 25-1 O/L (I)
35	Chain-R 35-1 -10 (I)	Chain-R 35-1 C/L (I)	Chain-R 35-1 O/L (I)
40	Chain-R 40-1 -10 (I)	Chain-R 40-1 C/L (I)	Chain-R 40-1 O/L (I)
41	Chain-R 41-1 -10 (I)	Chain-R 41-1 C/L (I)	Chain-R 41-1 O/L (I)
50	Chain-R 50-1 -10 (I)	Chain-R 50-1 C/L (I)	Chain-R 50-1 O/L (I)
60	Chain-R 60-1 -10 (I)	Chain-R 60-1 C/L (I)	Chain-R 60-1 O/L (I)
80	Chain-R 80-1 -10 (I)	Chain-R 80-1 C/L (I)	Chain-R 80-1 O/L (I)
100	Chain-R 100-1 -10 (I)	Chain-R 100-1 C/L (I)	Chain-R 100-1 O/L (I)
120	Chain-R 120-1 -10 (I)	Chain-R 120-1 C/L (I)	Chain-R 120-1 O/L (I)
140	Chain-R 140-1 -10 (I)	Chain-R 140-1 C/L (I)	Chain-R 140-1 O/L (I)
160	Chain-R 160-1 -10 (I)	Chain-R 160-1 C/L (I)	Chain-R 160-1 O/L (I)
200	Chain-R 200-1 -10 (I)	Chain-R 200-1 C/L (I)	Chain-R 200-1 O/L (I)

ANSI SINGLE STRAND
ROLLER CHAIN and LINKS

MADE IN USA

#	CHAIN	C/L LINK	O/L LINK
	PART #	PART #	PART #
25	Chain-R 25-1 -10 (US)	Chain-R 25-1 C/L (US)	Chain-R 25-1 O/L (US)
35	Chain-R 35-1 -10 (US)	Chain-R 35-1 C/L (US)	Chain-R 35-1 O/L (US)
40	Chain-R 40-1 -10 (US)	Chain-R 40-1 C/L (US)	Chain-R 40-1 O/L (US)
41	Chain-R 41-1 -10 (US)	Chain-R 41-1 C/L (US)	Chain-R 41-1 O/L (US)
50	Chain-R 50-1 -10 (US)	Chain-R 50-1 C/L (US)	Chain-R 50-1 O/L (US)
60	Chain-R 60-1 -10 (US)	Chain-R 60-1 C/L (US)	Chain-R 60-1 O/L (US)
80	Chain-R 80-1 -10 (US)	Chain-R 80-1 C/L (US)	Chain-R 80-1 O/L (US)
100	Chain-R 100-1 -10 (US)	Chain-R 100-1 C/L (US)	Chain-R 100-1 O/L (US)
120	Chain-R 120-1 -10 (US)	Chain-R 120-1 C/L (US)	Chain-R 120-1 O/L (US)
140	Chain-R 140-1 -10 (US)	Chain-R 140-1 C/L (US)	Chain-R 140-1 O/L (US)
160	Chain-R 160-1 -10 (US)	Chain-R 160-1 C/L (US)	Chain-R 160-1 O/L (US)

50' & 100' Rolls of Chain Are Available
Call For Pricing

ANSI DOUBLE STRAND
ROLLER CHAIN and LINKS
* IMPORT *

#	CHAIN PART #	C/L LINK PART #	O/L LINK PART #
35-2	Chain-R 35-2 -10 (I)	Chain-R 35-2 -C/L (I)	Chain-R 35-2 -O/L (I)
40-2	Chain-R 40-2 -10 (I)	Chain-R 40-2 -C/L (I)	Chain-R 40-2 -O/L (I)
50-2	Chain-R 50-2 -10 (I)	Chain-R 50-2 -C/L (I)	Chain-R 50-2 -O/L (I)
60-2	Chain-R 60-2 -10 (I)	Chain-R 60-2 -C/L (I)	Chain-R 60-2 -O/L (I)
80-2	Chain-R 80-2 -10 (I)	Chain-R 80-2 -C/L (I)	Chain-R 80-2 -O/L (I)
100-2	Chain-R 100-2 -10 (I)	Chain-R 100-2 -C/L (I)	Chain-R 100-2 -O/L (I)
120-2	Chain-R 120-2 -10 (I)	Chain-R 120-2 -C/L (I)	Chain-R 120-2 -O/L (I)
140-2	Chain-R 140-2 -10 (I)	Chain-R 140-2 -C/L (I)	Chain-R 140-2 -O/L (I)
160-2	Chain-R 160-2 -10 (I)	Chain-R 160-2 -C/L (I)	Chain-R 160-2 -O/L (I)
180-2	Chain-R 180-2 -10 (I)	Chain-R 180-2 -C/L (I)	Chain-R 180-2 -O/L (I)

ANSI DOUBLE STRAND
ROLLER CHAIN and LINKS
MADE IN USA

#	CHAIN PART #	C/L LINK PART #	O/L LINK PART #
35-2	Chain-R 35-2 -10 (US)	Chain-R 35-2 -C/L (US)	Chain-R 35-2 -O/L (US)
40-2	Chain-R 40-2 -10 (US)	Chain-R 40-2 -C/L (US)	Chain-R 40-2 -O/L (US)
50-2	Chain-R 50-2 -10 (US)	Chain-R 50-2 -C/L (US)	Chain-R 50-2 -O/L (US)
60-2	Chain-R 60-2 -10 (US)	Chain-R 60-2 -C/L (US)	Chain-R 60-2 -O/L (US)
80-2	Chain-R 80-2 -10 (US)	Chain-R 80-2 -C/L (US)	Chain-R 80-2 -O/L (US)
100-2	Chain-R 100-2 -10 (US)	Chain-R 100-2 -C/L (US)	Chain-R 100-2 -O/L (US)
120-2	Chain-R 120-2 -10 (US)	Chain-R 120-2 -C/L (US)	Chain-R 120-2 -O/L (US)
140-2	Chain-R 140-2 -10 (US)	Chain-R 140-2 -C/L (US)	Chain-R 140-2 -O/L (US)
160-2	Chain-R 160-2 -10 (US)	Chain-R 160-2 -C/L (US)	Chain-R 160-2 -O/L (US)
180-2	Chain-R 180-2 -10 (US)	Chain-R 180-2 -C/L (US)	Chain-R 180-2 -O/L (US)

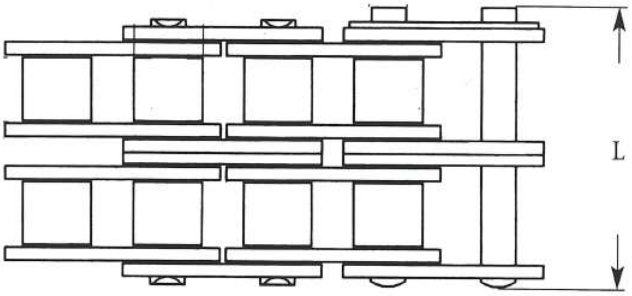

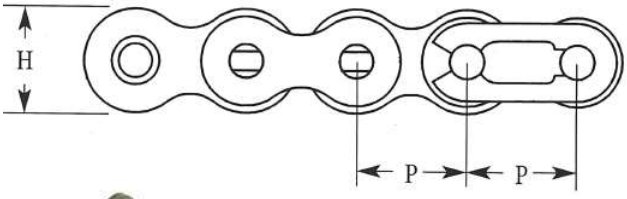

ANSI DOUBLE STRAND

#	PITCH P	OVERALL WIDTH L	HEIGHT H
35-2	3/8"	.918"	.346"
40-2	1/2"	1.28"	0.469"
50-2	5/8"	1.571"	0.585"
60-2	3/4"	1.961"	0.715"
80-2	1"	2.468"	0.949"
100-2	1-1/4"	3.031"	1.188"
120-2	1-1/2"	3.791"	1.425"
140-2	1-3/4"	4.079"	1.663"
160-2	2"	4.889"	1.899"
180-2	2-1/4"	5.643"	2.047"

50' & 100' Rolls of Chain Are Available
Call For Pricing

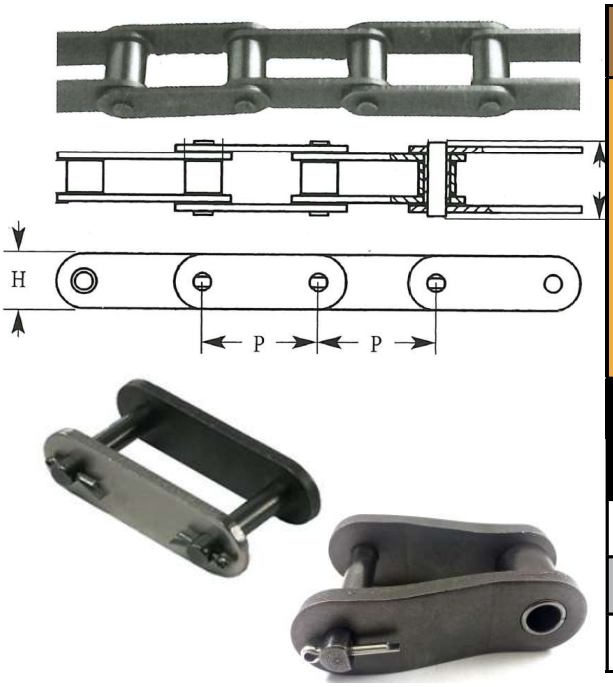

HEAVY-DUTY CONVEYOR CHAIN

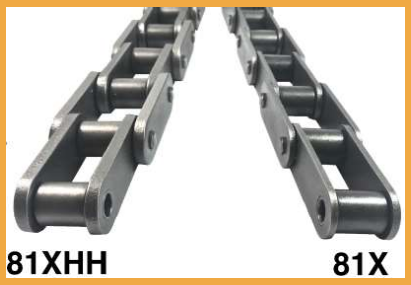

#	PITCH	OVERALL WIDTH	HEIGHT	CHAIN	C/L LINK	O/L LINK
	P	L	H	PART # 10'	PART # 10'	PART # 10'
81X	2.609"	2.062"	1.122"	Chain-81X-10	Chain-81X-C/L	Chain-81X-O/L
81XH	2.609"	2.531"	1.122"	Chain-81XH-10	Chain-81XH-C/L	Chain-81XH-O/L
81XHH	2.609"	2.62"	1.27"	Chain-81XHH-10	Chain-81XHH-C/L	Chain-81XHH-O/L

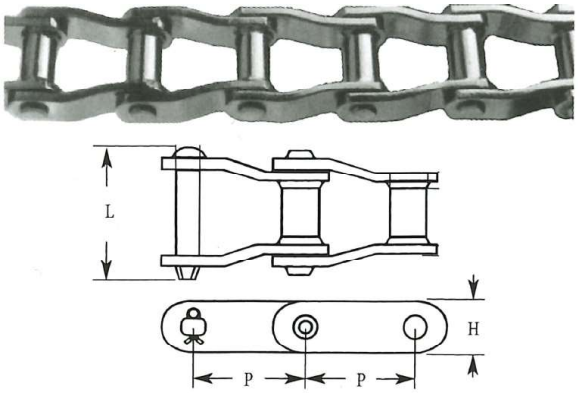

WELDED STEEL CHAIN

#	PITCH	OVERALL WIDTH	HEIGHT	CHAIN	LINKS PIN & COTTER
	P	L	H	PART # 10'	PART # 10'
WR78	2.609"	3.094"	1.125"	Chain-WR78-10	Chain-WR78-Link
WR82	3.075"	3.421"	1.250"	Chain-WR82-10	Chain-WR82-Link

10 - BEARINGS

Import Bearings	2-5
Auto-Greasers	6
Bearing Inserts & Flanges	7-8

Two-Bolt Flange Bearings (Import)

IPTCI BEARINGS

IPTCI Bearings

SHAFT	PART #	SHAFT DIA.	PART #
1/2"	NANFL201-8	1-3/8"	NANFL207-22
5/8"	NANFL202-10	1-7/16"	NANFL207-23
3/4"	NANFL204-12	1-1/2"	NANFL208-24
7/8"	NANFL205-14	1-9/16"	NANFL208-25
15/16"	NANFL205-15	1-5/8"	NANFL209-26
1"	NANFL205-16	1-11/16"	NANFL209-27
1-1/16"	NANFL206-17	1-3/4"	NANFL209-28
1-1/8"	NANFL206-18	1-7/8"	NANFL210-30
1-3/16"	NANFL206-19	1-15/16"	NANFL210-31
1-1/4"S	NANFL206-20	2"S	NANFL210-32
1-1/4"	NANFL207-20	2"	NANFL211-32
1-5/16"	NANFL207-21		

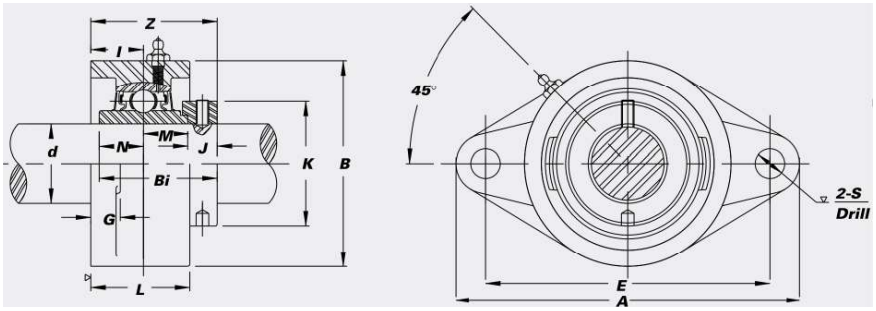

Bearing Duty: Standard Duty
Bearing Family: Eccentric Collar Ball Bearing
Housing Material: Cast Iron
Housing Type: 2 Bolt Flange
Lubrication Type: Lubrication Fitting
Seal Type: B-Type

SERIES	SHAFT (d)	A	E	I	G	L	S	B	Z	Bi	N	M	J	K	Bolt Used
201-8 202-10	1/2 5/8	4-13/32	3	43/64	7/16	31/32	25/64	2-3/8	1-19/32	1.4685	0.5472	0.5472	0.3740	1.1260	5/16
204-12	3/4	3-17/32	3-17/32	3/4	7/16	1-5/32	25/64	2-3/8	1-25/32	1.7126	0.6693	0.6693	0.3740	1.3110	5/16
205-14 205-15 205-16	7/8 15/16 1	5-1/8	3-57/64	356/32	1/2	1-7/32	15/32	2-11/16	1-27/32	1.7441	0.6850	0.6850	0.3740	1.5000	3/8
206-17 206-18 206-19 206-20	1-1/16 1-1/8 1-3/16 1-1/4	5-13/16	4-19/32	53/64	1/2	1-11/32	15/32	3-5/32	2	1.9016	0.7165	0.7165	0.4685	1.7520	3/8
207-20 207-21 207-22 207-23	1-1/4 1-5/16 1-3/8 1-7/16	6-11/32	5-1/8	27/32	9/16	1-7/16	33/64	3-17/32	2-1/8	2.0118	0.7402	0.7402	0.5315	2.1890	7/16
208-24 208-25	1-1/2 1-9/16	6-7/8	5-21/32	15/16	9/16	1-17/32	33/64	3-15/16	2-5/16	2.2165	0.8425	0.8425	0.5315	2.3740	7/16
209-26 209-27 209-28	1-5/8 1-11/16 1-3/4	7-13/32	5-27/32	15/16	9/16	1-9/16	19/32	4-1/4	2-5/16	2.2165	0.8425	0.8425	0.5315	2.5000	1/2
210-30 210-31 210-32	1-7/8 1-15/16 2	7-3/4	6-3/16	1-1/8	9/16	1-27/32	19/32	4-17/32	2-5/8	2.4685	0.9685	0.9685	0.5315	2.7520	1/2
211-32	2	8-13/16	7-1/4	1-17/64	13/16	1-31/32	41/64	5-1/8	2-31/32	2.8110	1.0906	1.0906	0.6299	3.000	9/16

IPTCI BEARINGS

Four-Bolt Flange Bearings (Import)

Bearing Duty: Standard Duty
Bearing Family: Eccentric Collar Ball Bearing
Housing Material: Cast Iron
Housing Type: 4 Bolt Flange
Lubrication Type: Lubrication Fitting
Seal Type: B-Type

IPTCI Bearings

SHAFT	PART #	SHAFT	PART #
1/2"	NANF201-8	1-5/8"	NANF209-26
5/8"	NANF202-10	1-11/16"	NANF209-27
3/4"	NANF204-12	1-3/4"	NANF209-28
7/8"	NANF205-14	1-7/8"	NANF210-30
15/16"	NANF205-15	1-15/16"	NANF210-31
1"	NANF205-16	2"S	NANF210-32
1-1/16"	NANF206-17	2"	NANF211-32
1-1/8"	NANF206-18	2-1/8"	NANF211-34
1-3/16"	NANF206-19	2-3/16"	NANF211-35
1-1/4"S	NANF206-20	2-1/4"	NANF212-36
1-1/4"	NANF207-20	2-3/8"	NANF212-38
1-5/16"	NANF207-21	2-7/16"	NANF212-39
1-3/8"	NANF207-22	2-1/2"	NANF213-40
1-7/16"	NANF207-23	2-15/16"	NANF215-47
1-1/2"	NANF208-24	3"	NANF215-48
1-9/16"	NANF208-25		

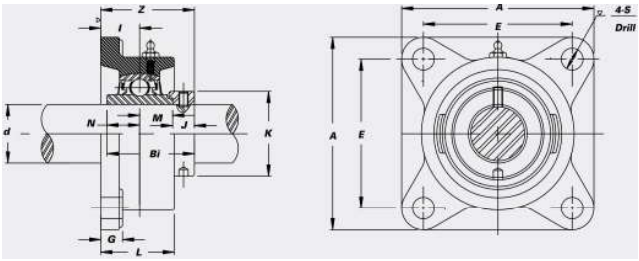

Series		SHAFT (d)	A	E	I	G	L	S	Z	Bi	N	M	J	K	Bolt Used
NANF	201-8 202-10	1/2 5/8	3	2-1/8	21/32	3/8	1-3/32	7/16	1-37/64	1.4685	0.5472	0.5472	0.3740	1.1260	3/8
NANF	204-12	3/4	3-3/8	2-1/2	3/4	19/32	1-5/32	7/16	1-25/32	1.7126	0.6693	0.6693	0.3740	1.3110	3/8
NANF	205-14 205-15 205-16	7/8 15/16 1	3-3/4	2-3/4	25/32	19/32	1-7/32	29/64	1-27/32	1.7441	0.6850	0.6850	0.3740	1.5000	3/8
NANF	206-17 206-18 206-19 206-20	1-1/16 1-1/8 1-3/16 1-1/4	4-1/4	3-1/4	53/64	5/8	1-31/32	33/64	2	1.9016	0.7165	0.7165	0.4685	1.7520	7/16
NANF	207-20 207-21 207-22 207-23	1-1/4 1-5/16 1-3/8 1-7/16	4-19/32	3-5/8	27/32	21/32	1-7/16	33/64	2-1/8	2.0118	0.7402	0.7402	0.5315	2.1890	7/16
NANF	208-24 208-25	1-1/2 1-9/16	5-1/8	4	15/16	21/32	1-17/32	35/64	2-5/16	2.2165	0.8425	0.8425	0.5315	2.3740	1/2
NANF	209-26 209-27 209-28	1-5/8 1-11/16 1-3/4	5-13/32	4-1/8	15/16	23/32	1-9/16	5/8	2-5/16	2.2165	0.8425	0.8425	0.5315	2.5000	9/16
NANF	210-30 210-31 210-32	1-7/8 1-15/16 2	5-5/8	4-3/8	1-1/8	25/32	1-27/32	5/8	2-5/8	2.4685	0.9685	0.9685	0.5315	2.7520	9/16
NANF	211-32 211-34 211-35	2 2-1/8 2-3/16	6-3/8	5-1/8	1-17/64	13/16	1-31/32	43/64	2-31/32	2.8110	1.0906	1.0906	0.6299	3.000	5/8
NANF	212-36 212-38 212-39	2-1/4 2-3/8 2-7/16	6-7/8	5-5/8	1-27/64	13/16	2-5/32	43/64	3-1/4	3.0630	1.2165	1.2165	0.6299	3.3150	5/8
NANF	213-40	2-1/2	7-3/8	5-7/8	1-1/2	7/8	2-5/16	25/32	3-17/32	3.3740	1.3425	1.3425	0.6890	3.3858	3/4
NANF	215-47 215-48	2-15/16 3	7-3/4	6	1-5/8	7/8	2-27/64	25/32	3-25/32	3.6260	1.4685	1.4685	0.6890	4.0157	3/4

IPTCI Bearings

SHAFT	PART #	SHAFT	PART #
1/2"	NAP201-8	1-5/8"	NAP209-26
5/8"	NAP202-10	1-11/16"	NAP209-27
3/4"	NAP204-12	1-3/4"	NAP209-28
7/8"	NAP205-14	1-7/8"	NAP210-30
15/16"	NAP205-15	1-15/16"	NAP210-31
1"	NAP205-16	2"S	NAP210-32
1-1/16"	NAP206-17	2"	NAP211-32
1-1/8"	NAP206-18	2-1/8"	NAP211-34
1-3/16"	NAP206-19	2-3/16"	NAP211-35
1-1/4"S	NAP206-20	2-1/4"	NAP212-36
1-1/4"	NAP207-20	2-3/8"	NAP212-38
1-5/16"	NAP207-21	2-7/16"	NAP212-39
1-3/8"	NAP207-22	2-1/2"	NAP213-40
1-7/16"	NAP207-23	2-15/16"	NAP215-47
1-1/2"	NAP208-24	3"	NAP215-48
1-9/16"	NAP208-25		

Bearing Duty: Standard Duty
Bearing Family: Eccentric Collar Ball Bearing
Housing Material: Cast Iron
Housing Type: 2 Bolt Base
Lubrication Type: Lubrication Fitting
Seal Type: B-Type

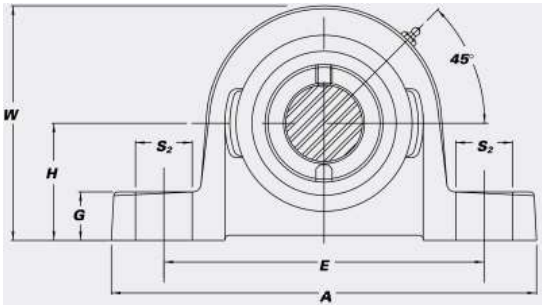

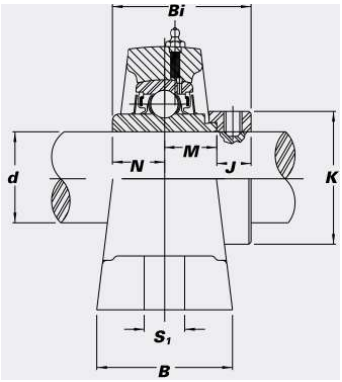

Pillow Block Bearings (Import) *Eccentric Collar*

	SHAFT (d)	H	A	E	B	S2	S1	G	W	Bi	N	M	J	K	Bolt Used
201-8 202-10	1/2 5/8	1-3/16	4-7/8	3-5/8	1-7/16	3/4	7/16	17/32	2-23/64	1.4685	0.5472	0.5472	0.3740	1.1620	3/8
204-12	3/4	1-5/16	5	3-3/4	1-1/2	11/16	7/16	9/16	2-19/32	1.7126	0.6693	0.6693	0.3740	1.3110	3/8
205-14 205-15 205-16	7/8 15/16 1	1-7/16	5-1/2	4-1/8	1-1/2	11/16	1/2	5/8	2-27/32	1.7441	0.6850	0.6850	0.3740	1.5000	3/8
206-17 206-18 206-19 206-20	1-1/16 1-1/8 1-3/16 1-1/4	1-7/16	6-5/16	4-3/4	1-3/4	13/16	9/16	11/16	3-19/64	1.9016	0.7165	0.7165	0.4685	1.7520	1/2
207-20 207-21 207-22 207-23	1-1/4 1-5/16 1-3/8 1-7/16	1-7/8	6-17/32	5	1-29/32	7/8	9/16	3/4	3-11/16	2.0118	0.7402	0.7402	0.5315	2.1890	1/2
208-24 208-25	1-1/2 1-9/16	1-15/16	7-1/8	5-7/16	2	7/8	9/16	13/16	4	2.2165	0.8425	0.8425	0.5315	2.3740	1/2
209-26 209-27 209-28	1-5/8 1-11/16 1-3/4	2-1/8	7-1/2	5-3/4	2-1/8	13/16	19/32	7/8	4-17/64	2.2165	0.8425	0.8425	0.5315	2.5000	1/2
210-30 210-31 210-32	1-7/8 1-15/16 2	2-1/4	8	6-1/4	2-1/4	15/16	23/32	15/16	4-33/64	2.4685	0.9685	0.9685	0.5315	2.7520	5/8
211-32 211-34 211-35	2 2-1/8 2-3/16	2-1/2	8-5/8	6-7/8	2-3/8	15/16	23/32	1-1/16	5-1/32	2.8110	1.0905	1.0905	0.6300	3.0000	5/8
212-36 212-38 212-39	2-1/4 2-3/8 2-7/16	2-3/4	9-17/32	7-11/32	2-1/2	1	25/32	1-1/16	5-33/64	3.0630	1.2165	1.2165	0.6300	3.3150	5/8
213-40	2-1/2	3	10-3/4	8-1/8	2-11/16	1-3/16	13/16	1-1/8	6-1/32	3.3740	1.3425	1.3425	0.6890	3.3580	5/8
215-47 215-48	2-15/16 3	3-1/4	10-13/16	8-1/2	2-15/16	1-1/4	1	1-1/8	6-33/64	3.6260	1.4685	1.4685	0.6890	4.0157	7/8

IPTCI BEARINGS

Bearing Duty: Standard Duty
Bearing Family: Set Screw Collar Ball Bearing
Housing Material: Cast Iron
Housing Type: 2 Bolt Base
Lubrication Type: Lubrication Fitting
Seal Type: B-Type

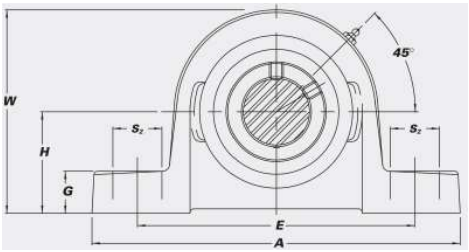

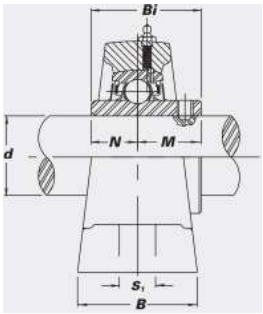

SHAFT	PART #	SHAFT	PART #
1/2"	UCP201-8	1-11/16"	UCP209-27
5/8"	UCP202-10	1-3/4"	UCP209-28
3/4"	UCP204-12	1-7/8"	UCP210-30
7/8"	UCP205-14	1-15/16"	UCP210-31
15/16"	UCP205-15	2"	UCP210-32
1"	UCP205-16	2"	UCP211-32
1-1/16"	UCP206-17	2-1/8"	UCP211-34
1-1/8"	UCP206-18	2-3/16"	UCP211-35
1-3/16"	UCP206-19	2-1/4"	UCP212-36
1-1/4"	UCP206-20	2-3/8"	UCP212-38
1-1/4"	UCP207-20	2-7/16"	UCP212-39
1-5/16"	UCP207-21	2-1/2"	UCP213-40
1-3/8"	UCP207-22	2-11/16"	UCP214-43
1-7/16"	UCP207-23	2-3/4"	UCP214-44
1-1/2"	UCP208-24	2-15/16"	UCP215-47
1-9/16"	UCP208-25	3"	UCP215-48
1-5/8"	UCP209-26		

Pillow Block Bearings (Import) *Set Screw Collar*

	SHAFT (d)	H	A	E	B	S2	S1	G	W	Bi	N	M	BOLT USED
201-8 202-10	1/2 5/8	1-3/16	4-7/8	3-5/8	1-7/16	3/4	7/16	17/32	2-23/64	1.0236	0.3937	0.6299	3/8
204-12	3/4	1-5/16	5	3-3/4	1-1/2	11/16	7/16	9/16	2-19/32	1.2205	0.5000	0.7205	3/8
205-14 205-15 205-16	7/8 15/16 1	1-7/16	5-1/2	4-1/8	1-1/2	11/16	1/2	5/8	2-27/32	1.3386	0.5630	0.7756	3/8
206-17 206-18 206-19 206-20	1-1/16 1-1/8 1-3/16 1-1/4	1-7/16	6-5/16	4-3/4	1-3/4	13/16	9/16	11/16	3-19/64	1.5000	0.6260	0.8740	1/2
207-20 207-21 207-22 207-23	1-1/4 1-5/16 1-3/8 1-7/16	1-7/8	6-17/32	5	1-29/32	7/8	9/16	3/4	3-11/16	1.6890	0.6890	1.0000	1/2
208-24 208-25	1-1/2 1-9/16	1-15/16	7-1/8	5-7/16	2	7/8	9/16	13/16	4	1.9370	0.7480	1.1890	1/2
209-26 209-27 209-28	1-5/8 1-11/16 1-3/4	2-1/8	7-1/2	5-3/4	2-1/8	13/16	19/32	7/8	4-17/64	1.9370	0.7480	1.1890	1/2
210-30 210-31 210-32	1-7/8 1-15/16 2	2-1/4	8	6-1/4	2-1/4	15/16	23/32	15/16	4-33/64	2.3015	0.7480	1.2835	5/8
211-32 211-34 211-35	2 2-1/8 2-3/16	2-1/2	8-5/8	6-7/8	2-3/8	15/16	23/32	1-1/16	5-1/32	2.1890	0.8740	1.31540	5/8
212-36 212-38 212-39	2-1/4 2-3/8 2-7/16	2-3/4	9-17/32	7-11/32	2-1/2	1	25/32	1-1/16	5-33/64	2.5630	1.0000	1.5630	5/8
213-40	2-1/2	3	10-3/4	8-1/8	2-11/16	1-3/16	13/16	1-1/8	6-1/32	2.5630	1.0000	1.5630	5/8
214-43 214-44	2-11/16 2-3/4	3	10-3/4	8-1/8	2-1/2	1-13/16	13/16	1-1/8	6-1/32	2.9730	1.1890	1.7480	5/8
215-47 215-48	2-15/16 3	3-1/4	10-13/16	8-1/2	2-15/16	1-1/4	1	1-1/8	6-33/64	3.0630	1.3110	1.7520	7/8

perma

The Expert in Lubrication Solutions

Equipment often extends over several levels and can be difficult to reach. Optimal lubrication should take place while the system is running. Lubrication points are often neglected because they are located up high, around the back or in places with little room to maneuver. Insufficient lubrication causes premature equipment damage, creating unscheduled and costly downtimes.

- Constant Renewal Of The Lubricating Film Ensures Equipment Availability
- Reliable, Clean & Precise Lubrication Around The Clock
- Discharge Periods From 1 -12 Months
- Operating Temperature From -4 °F to 140 °F

Perma FLEX is a single-point lubrication system for all types of applications and industries. Ingress protection to IP 68 level guarantees reliable lubrication in extremely dusty and high moisture environments. The wide operatiing temperature range makes it suitable for many applications, indoors and outdoors. Activation has never been easier, simply turn the switch to the required discharge period (1 - 12 months) and Perma FLEX is ready to go. The gas generated unit produces the required pressure to continuously supply fresh lubrication for the selected discharge period. If necessary, the discharge period can be adjusted even after activation and it can be turned off during longer non-operation periods.

ITEM #: Flex125-1365

PIECE OF MIND FOR UP TO 12-MONTHS!

For applications with high variations in temperature. Perma **NOVA** can be used in all applications that are within a temperature of -4 °F to 140 °F. A discharge period of 1 - 12 months can be easily programmed by pushing the selection button on the NOVA control unit. A built-in temperature sensor periodically measures the ambient temperature and the control unit calculates the required gas generation based on this data. This ensures a continuous and controlled discharge. Perma **NOVA** consists. of a reusable control unit, lubricator canister filled with 130 cm³ of grease and a protective cover.

COMPLETE UNIT - ITEM #: Nova130-1365
REFILL CARTRIDGE - ITEM #: NovaLC130-1365

Mounting Accessories	
Description	***Part #***
Adapter, 1/4" x 1/8" For Flex Greasers	B-113
Adapter, 1/4" x 1/8" For Nova Greasers	B-100
Flex 125 Mounting Kit, Includes: (2) 45° Elbows, (2) 90° Elbows (2) 1/4" to 1/8" Adapters & Teflon Tape	Flex125-Kit
NOVA 130 Mounting Kit, Includes: (2) 45° Elbows, (2) 90° Elbows (2) 1/4" to 1/8" Adapters & Teflon Tape	Nova130-Kit

Call For Price On Other Mounting Brackets, Adapters & Hoses

BEARING INSERTS for Flanged Housings

ECCENTRIC Lock Collars

Greasable

	PART #
1/2"	SA201-8G
5/8"	SA202-10G
3/4"	SA204-12G
7/8"	SA205-14G
15/16"	SA205-15G
1"	SA205-16G
1-1/16"	SA206-17G
1-1/8"	SA206-18G
1-3/16"	SA206-19G
1-1/4"	SA206-20G
1-1/4"	SA207-20G
1-5/16"	SA207-21G
1-3/8"	SA207-22G
1-7/16"	SA207-23G
1-1/2"	SA208-24G
1-5/8"	SA209-26G
1-11/16"	SA209-27G
1-3/4"	SA209-28G
1-7/8"	SA210-30G
1-15/16"	SA210-31G
2"	SA210-32G
2"	SA211-32G
2-3/16"	SA211-35G

Non-Greasable

	PART #
1/2"	SA201-8N
5/8"	SA202-10N
3/4"	SA204-12N
7/8"	SA205-14N
15/16"	SA205-15N
1"	SA205-16N
1-1/16"	SA206-17N
1-1/8"	SA206-18N
1-3/16"	SA206-19N
1-1/4"	SA206-20N
1-1/4"	SA207-20N
1-5/16"	SA207-21N
1-3/8"	SA207-22N
1-7/16"	SA207-23N
1-1/2"	SA208-24N
1-9/16"	SA208-25N
1-5/8"	SA209-26N
1-11/16"	SA209-27N
1-3/4"	SA209-28N
1-7/8"	SA210-30N
1-15/16"	SA210-31N
2"	SA210-32N
2"	SA211-32N
2-3/16"	SA211-35N

SET SCREW Lock Collars

Greasable

	PART #
1/2"	SB201-8G
5/8"	SB202-10G
3/4"	SB204-12G
7/8"	SB205-14G
15/16"	SB205-15G
1"	SB205-16G
1-1/16"	SB206-17G
1-1/8"	SB206-18G
1-3/16"	SB206-19G
1-1/4"	SB206-20G
1-1/4"	SB207-20G
1-5/16"	SB207-21G
1-3/8"	SB207-22G
1-7/16"	SB207-23G
1-1/2"	SB208-24G
1-9/16"	SB208-25G

Non-Greasable

	PART #
1/2"	SB201-8N
5/8"	SB202-10N
3/4"	SB204-12N
7/8"	SB205-14N
1"	SB205-16N
1-1/8"	SB206-18N
1-3/16"	SB206-19N
1-1/4"	SB206-20N
1-1/4"	SB207-20N
1-5/16"	SB207-21N
1-3/8"	SB207-22N
1-7/16"	SB207-23N
1-1/2"	SB208-24N

2-BOLT FLANGES

SHAFT DIAMETER	For Bearing Series	Bolt Spacing Center-to-Center	PART #
1/2", 9/16", 5/8"	201-202	2-1/2"	PFL203
3/4"	204	2-13/16"	PFL204
13/16", 7/8", 15/16", 1"	205	3"	PFL205
1-1/16", 1-1/8", 1-3/16", 1-1/4"S	206	3-9/16"	PFL206
1-1/4", 1-5/16", 1-3/8", 1-7/16"	207	3-15/16"	PFL207

(Sold by the half: not by the set.)

3-BOLT FLANGES

SHAFT DIAMETER	For Bearing Series	Bolt Spacing Center-to-Center	PART #
1/2", 9/16", 5/8"	201-202	2-1/2"	PF203
3/4"	204	2-13/16"	PF204
13/16", 7/8", 15/16", 1"	205	3"	PF205
1-1/16", 1-1/8", 1-3/16", 1-1/4"S	206	3-9/16"	PF206
1-1/4", 1-5/16", 1-3/8", 1-7/16"	207	3-15/16"	PF207
1-1/2", 1-9/16"	208	4-11/16"	PF208
1-5/8", 1-11/16", 1-3/4"	209	4-3/4"	PF209
1-13/16", 1-7/8", 1-15/16", 2"S	210	5"	PF210
2", 2-1/16", 2-1/8", 2-3/16"	211	5-11/16"	PF211

(Sold by the half: not by the set.)

3-BOLT ROUND RELUBE FLANGES

SHAFT DIAMETER	Bearing Series	Bolt Spacing Center-to-Center		PART #
3/4"	204	2-13/16"	With Zerk	47MM-3G
			Without Zerk	47MM-3GP
13/16", 7/8", 15/16", 1"	205	3"	With Zerk	52MM-3G
			Without Zerk	52MM-3GP
1-1/16", 1-1/8", 1-3/16", 1-1/4"S	206	3-9/16"	With Zerk	62MM-3G
			Without Zerk	62MM-3GP
1-1/4", 1-5/16", 1-3/8", 1-7/16"	207	3-15/16"	With Zerk	72MM-3G
			Without Zerk	72MM-3GP

When ordering 3-bolt relubee flanges, order one "G" flange (with grease groove and zerk) and one "GP" flange (with grease groove only) per bearing.

(Sold by the half: not by the set.)

3-BOLT TRIANGULAR FLANGETTES

SHAFT DIAMETER	For Bearing Series	Bolt Spacing Center-to-Center	PART #
1/2", 9/16", 5/8"	201-202	2-1/2"	PFT203
3/4"	204	2-13/16"	PFT204
13/16", 7/8", 15/16", 1"	205	3"	PFT205
1-1/16", 1-1/8", 1-3/16", 1-1/4"S	206	3-9/16"	PFT206
1-1/4", 1-5/16", 1-3/8", 1-7/16"	207	3-15/16"	PFT207

(Sold by the half: not by the set.)

11 - MISC.

Shaft-Mount Reducers 2-3

Interchangeable With
DODGE, HUB CITY,
EDISON & BROWNING

WSMR SERVICE CLASS II SHAFT MOUNT REDUCER

RATIO	SIZE	INPUT SHAFT DIA.	PART #
15:1	#2	1-1/8"	WSMR2-15-1
	#3	1-1/4"	WSMR3-15-1
	#4	1-7/16"	WSMR4-15-1
	#5	1-15/16"	WSMR5-15-1
	#6	2-3/16"	WSMR6-15-1
	#7	2-7/16"	WSMR7-15-1
25:1	#2	1-1/8"	WSMR2-25-1
	#3	1-1/4"	WSMR3-25-1
	#4	1-7/16"	WSMR4-25-1
	#5	1-15/16"	WSMR5-25-1
	#6	2-3/16"	WSMR6-25-1
	#7	2-7/16"	WSMR7-25-1

THE "ULTIMATE" SHAFT MOUNT REDUCER

Designed for OEMs with a stronger cast-iron casing, increased mounting options and an extended three year warranty. The "Ultimate" shaft mount reducer is the best choice for screw conveying applications and all other shaft mount applications requiring a more rugged design. This reducer is offered with industry standard CEMA screw conveyor flanges and drive shafts for output bore sizes ranging from 1-15/16" to 3-7/16", in speed ratios of 9:1, 15:1 and 25:1. The reducer is also available in bore sizes 3-5/16" through 4-15/16" for non-screw conveyor applications in speed ratios of 15:1 and 25:1.

- 9:1, 15:1 and 25:1 ratios
- Box Sizes 2-9
- Tapered Bushing Type (bushing not included)
- Premium quality ball and tapered bearings - double-lip seals
- Shafts and gears manufactured from high grade steel, case hardenec
- Industrial grade all-cast iron housings protect gearing for life
- Extended gear centers and tooth contact
- Metal reinforced double-lip, spring loaded oil seals
- Dimensional drop-in for all major makes

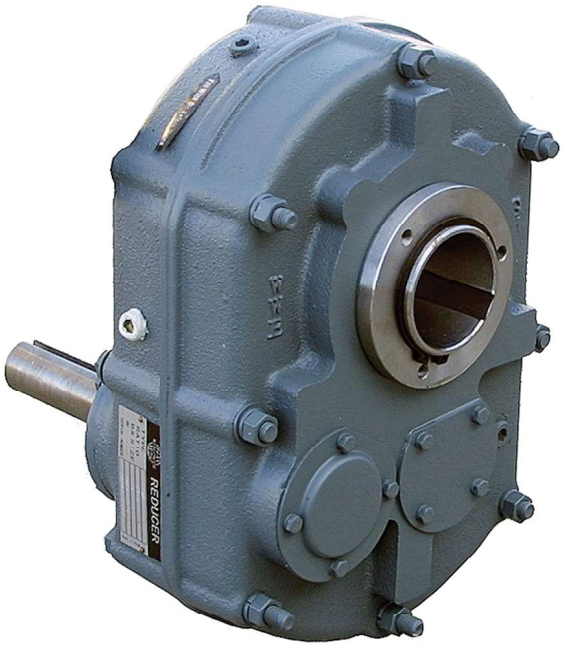

TAPER LOCK BUSHING KITS

BOX SIZE

BUSHING SIZE	#2 PART #	#3 PART #	#4 PART #	#5 PART #	#6 PART #	#7 PART #
1-1/4"	2WTBK-1.14					
1-5/16"	2WTBK-1.516					
1-3/8"	2WTBK-1.38					
1-7/16"	2WTBK-1.716					
1-1/2"	2WTBK-1.12					
1-5/8"	2WTBK-1.58					
1-11/16"	2WTBK-1.1116	3WTBK-1.1116				
1-3/4"	2WTBK-1.34	3WTBK-1.34				
1-7/8"	2WTBK-1.78	3WTBK-1.78				
1-15/16"	2WTBK-1.1516	3WTBK-1.1516	4WTBK-1.1516			
2"		3WTBK-2	4WTBK-2			
2-1/8"		3WTBK-2.18	4WTBK-2.18			
2-3/16"		3WTBK-2.316	4WTBK-2.316	5WTBK-2.316		
2-1/4"			4WTBK-2.14	5WTBK-2.14		
2-7/16"			4WTBK-2.716	5WTBK-2.716	6WTBK-2.716	7WTBK-2.716
2-1/2"				5WTBK-2.12	6WTBK-2.12	7WTBK-2.12
2-11/16"				5WTBK-2.1116	6WTBK-2.1116	7WTBK-2.1116
2-15/16"				5WTBK-2.1516	6WTBK-2.1516	7WTBK-2.1516
3"					6WTBK-3	7WTBK-3
3-3/16"					6WTBK-3.316	7WTBK-3.316
3-7/16"					6WTBK-3.716	7WTBK-3.716
3-15/16"						7WTBK-3.1516
4"						7WTBK-4

BOX SIZE	MOTOR MOUNTS PART #	MOTOR MOUNTS FITS MOTOR FRAMES	TORQUE ARM PART #	BELT GUARD PART #	FLANGE ADAPTER PART #	BACKSTOP ASSY. KIT PART #
#2	MM2	56-215T	WSMR2-TA	BG2	2SCF	WSMR2BSK
#3	MM3A	56-215T	WSMR3-TA	BG3	3SCF	WSMR3BSK
#4	MM4	143T-286T	WSMR4-TA	BG4	4SCF	WSMR4BSK
#5	MM5A	143T-286T	WSMR5-TA	BG5	5SCF	WSMR5BSK
#6	MM6A	143T-326T	WSMR6-TA	BG6	6SCF	WSMR6BSK
#7	MM7	143T-365T	WSMR7-TA	BG7	--	WSMR7BSK

13 - MARTIN-WAY MFG. 2-10

LVD 12' x 1/4" Hydraulic Swing Beam Shear

We now have Fabrication Shops at BOTH of our locations to better serve our customer's needs

From custom augers and shafts to even dryers, our team can fabricate pretty much anything you need.

Give us a call or stop in to either of our facilities to discuss your needs

Bridgeport Milling Machine

LeBlond Lathe

Amada 170-Ton Press Brake

Need Something Custom? Let our team design and build it to your specs!

Baileigh Plate Roller

Quick Turn-Around Built The Way You Want It!

Baileigh Semi-Auto Band Saw

315-923-9118

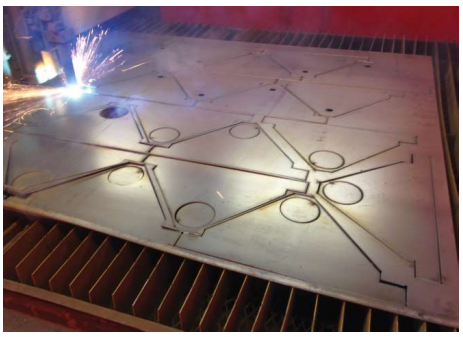

Hyper-Therm Plasma Cutting Table

Square Spouting

* 10ga. Galvanized
* 10' Sections
* Removeable Lid
* Urethane Lined

Custom Built Hoppers

Any Size, Any Dimensions
and
Designed To Suit Your Needs

Much, Much More

* Transistions
* Custom Shafts
* Drive-Over/Pit Grates & Covers

If You Need It, Chances Are
We Can Build It
Give Us A Call @ 315-923-9118

BEARING END CAPS

- Auger Tail Cap
- Made To Bolt To Flange Rings
- Includes Dodge Tail Bearing

	Part #
4"	MW-BEC-04
6"	MW-BEC-06
8"	MW-BEC-08
10"	MW-BEC-10
12"	MW-BEC-12
14"	MW-BEC-14

* Sukup Hopper Bin Unloads *

Sukup Hopper Bin Unload Slide Gate

	Part #
Mounts Directly To Sukup Hopper Bins Includes Hand Slide w/ Rollers	MW-RG-16
GSI Adapter (Required To Use This Slide Gate)	SG-HB1610GG

Sukup Hopper Bin Adjustable Wedge

	Part #
Mounts Between The Slide Gate and The 16" Square Flanged Hopper To Allow Angle Adjustment For The Unload Auger	MW-AW

MARTIN-WAY SQ. FLANGED HOPPER

- 16" Square Flange
- For Sukup Hopper Bin Unloads
- Clean-Out Door
- Includes Dodge Tail Bearing

Size	Part #
4"	MW-FH16-04
6"	MW-FH16-06
8"	MW-FH16-08
10"	MW-FH16-10
12"	MW-FH16-12
14"	MW-FH16-14

HOPPERS

MARTIN-WAY FLANGE RING HOPPER

- Heavy-Duty, 10ga. Galv.
- Galvanized
- Removeable End Cap
- Includes Dodge Tail Bearing
- Clean-Out Door

Size	Part #
4"	MW-FHR-04
6"	MW-FHR-06
8"	MW-FHR-08
10"	MW-FHR-10
12"	MW-FHR-12
14"	MW-FHR-14

MARTIN-WAY BAND-ON INLET HOPPER

- Heavy-Duty
- 10ga. Galv.

Size	Part #
4"	MW-FHBO-04
6"	MW-FHBO-06
8"	MW-FHBO-08
10"	MW-FHBO-10
12"	MW-FHBO-12
14"	MW-FHBO-14

MARTIN-WAY DROP-THRU HOPPER

- Heavy-Duty, 10ga. Galv.
- Flip Open/Close Lid
- Hand Slide Gate
- Includes Tail Bearing

Size	Part #
6"	MW-DTH-06
8"	MW-DTH-08
10"	MW-DTH-10
12"	MW-DTH-12
14"	MW-DTH-14

MARTIN-WAY SQ. FLANGED HOPPER

- Heavy-Duty, 10ga. Galv.
- 16" Square Flange
- For Sukup Hopper Bin Unloads
- Clean-Out Door
- Includes Tail Bearing

Size	Part #
4"	MW-FH16-04
6"	MW-FH16-06
8"	MW-FH16-08
10"	MW-FH16-10
12"	MW-FH16-12
14"	MW-FH16-14

ROOF AUGER HOPPER

Use Above Sq. Hopper
&
Add This Adapter

Part #
MW-RAHA

BLANK CLAMP

- Heavy-Duty
- 10ga. Galvanized
- Two-Piece
- Bolt-Together

Size	Part #
6"	MW-BC-06
8"	MW-BC-08
10"	MW-BC-10
12"	MW-BC-12
14"	MW-BC-14

MARTIN-WAY MOUNTING BRACKET

**** SHORT ANGLE MOUNT ****

- Heavy-Duty
- Galvanized
- Adjustable

Size	Part #
6"	MW-MBS-06
8"	MW-MBS-08
10"	MW-MBS-10
12"	MW-MBS-12
14"	MW-MBS-14

Short Bracket (Angle) Only MW-MBS

Mounting Arms (Two 4' Lengths) MW-MBMA

MARTIN-WAY MOUNTING BRACKET

**** LONG ANGLE MOUNT ****

- Heavy-Duty
- Galvanized
- Adjustable

Size	Part #
6"	MW-MBL-06
8"	MW-MBL-08
10"	MW-MBL-10
12"	MW-MBL-12
14"	MW-MBL-14

Long Bracket (Angle) Only MW-MBL

Mounting Arms (Two 4' Lengths) MW-MBMA

MOUNTING BRACKET CLAMP ONLY

- Two-Piece Clamp
- Used On Above Mounting Brackets

Size	Part #
6"	MW-MBC-06
8"	MW-MBC-08
10"	MW-MBC-10
12"	MW-MBC-12
14"	MW-MBC-14

HAND SLIDES

DESCRIPTION	*PART #*
4" Hand Slide	MW-HS04
6" Hand Slide	MW-HS06
8" Hand Slide	MW-HS08
10" Hand Slide	MW-HS10
12" Hand Slide	MW-HS12
14" Hand Slide	MW-HS14

SIDE-DRAW CHUTE w/ REMOVABLE COVER

DESCRIPTION	PART #
Side-Draw Chute w/ Removeable Cover	MW-SDC

HEAVY-DUTY ROTARY UNLOADER

DESCRIPTION	PART #
6" HD 10ga. Rotary Unloader	MW-RU-06
8" HD 10ga. Rotary Unloader	MW-RU-08
10" HD 10ga. Rotary Unloader	MW-RU-10
12" HD 10ga. Rotary Unloader	MW-RU-12
22" HD Unloading Boot	MW-RUB

FLEX AUGER BIN UNLOAD ADAPTER

DESCRIPTION	PART #
Allows Flex Auger Unloader To Attach To Flat Bottom Bin Unload Well *Adapts To GSI Type Unloader	MW-FABU

HARVESTORE SILO ACCESSORIES

DESCRIPTION	PART #
Silo Side Inlet With Flip-Open Lid	MW-SSI
Silo Transition For Small Centrifugal Fan (4" x 36")	MW-HST(C)
Silo Transition For Large Axial Fan (4" x 50")	MW-HST(A)
Custom Silo Door F/ Harvestore Silo	MW-Door/ Harvestore

CUSTOM BEAN LADDER

DESCRIPTION	PART #
Martin-Way Built Bean Ladder, 10' Section	MW-BL(10)

CUSTOM BIN LIDS

DESCRIPTION	PART #
23" Standard Bin Lid	MW-BL23
39" HD Bin Lid	MW-BL39
24" - 48" Custom Bin Lid	MW-BLCU

3-POST BIN LIDS

48" = GSI Bins / 60" = Sukup & Brock

DESCRIPTION	PART #
48" 3-Post Bin Lid w/ 6" Inlet	MW-BL3P-48/06
48" 3-Post Bin Lid w/ 8" Inlet	MW-BL3P-48/08
48" 3-Post Bin Lid w/ 10" Inlet	MW-BL3P-48/10
48" 3-Post Bin Lid w/ 12" Inlet	MW-BL3P-48/12
48" 3-Post Bin Lid w/ 14" Inlet	MW-BL3P-48/14
60" 3-Post Bin Lid w/ 6" Inlet	MW-BL3P-60/06
60" 3-Post Bin Lid w/ 8" Inlet	MW-BL3P-60/08
60" 3-Post Bin Lid w/ 10" Inlet	MW-BL3P-60/10
60" 3-Post Bin Lid w/ 12" Inlet	MW-BL3P-60/12

3-Post Bin Lid
(Cushion Box Not Included)

AIR BOX VENT for TOP-DRY

Complete Air Box for Top-Dry with 2-Vents & Access Door

DESCRIPTION	PART #
2 Vent Air Box f/ Top-Dry (8" Inlet)	MW-TDAB-08(2V)
2 Vent Air Box f/ Top-Dry (10" Inlet)	MW-TDAB-10(2V)
2 Vent Air Box f/ Top-Dry (12" Inlet)	MW-TDAB-12(2V)
2 Vent Air Box f/ Top-Dry (14" Inlet)	MW-TDAB-14(2V)

Heavy-Duty To Help Vent Your Top-Dry Peak
Fill Spout Connects Directly To The Top of Box
Large Access Door Makes Installation & Serviceability A Breeze

LADDERS

DESCRIPTION	PART #
Ladder Section, 10' w/ Smooth Bar Rungs	MW-LS
Ladder Section, 10' w/ Rebar Rungs	MW-LR

CENTER SUMP / WELL GUARD

DESCRIPTION	PART #
Protect Against Plugged Wells While Unloading Your Bin - Used With or Without Sweep - Removeable Legs For Shipping - Galvanized	CG

TELESCOPIC LOAD-OUT SPOUTS

DESCRIPTION	PART #
6" Telescopic Load-Out Spout	MW-TLOP-06
8" Telescopic Load-Out Spout	MW-TLOP-08
10" Telescopic Load-Out Spout	MW-TLOP-10
12" Telescopic Load-Out Spout	MW-TLOP-12
14" Telescopic Load-Out Spout	MW-TLOP-14
16" Telescopic Load-Out Spout	MW-TLOP-16
* Does Not Include Cable Or Cable Control *	

12" HEAVY-DUTY POWERHEAD

DESCRIPTION	PART #
12" HD Powerhead (Up To 20HP)	MW-PH-12
14" HD Powerhead (Up to 20HP)	MW-PH-14

Heavier Than OEM Powerheads
Constructed of 3/16" & 1/4" Plate Steel
Designed To Accommodate Motors Up To 20HP
Complete with 2" Bearing and Belt Guard To Accommodate Up To 16" Pulley

COLLECTION HOPPERS

	DESCRIPTION	PART #
2 - to - 1	6" 2-to-1 Hopper	MW-H-2to1-06
	8" 2-to-1 Hopper	MW-H-2to1-08
	10" 2-to-1 Hopper	MW-H-2to1-10
	12" 2-to-1 Hopper	MW-H-2to1-12
3 - to - 1	6" 3-to-1 Hopper	MW-H-3to1-06
	8" 3-to-1 Hopper	MW-H-3to1-08
	10" 3-to-1 Hopper	MW-H-3to1-10
	12" 3-to-1 Hopper	MW-H-3to1-12

Constructed of 10ga. Galvanized Steel
Easy-Access Clean-out Port

INSPECTION DOORS

DESCRIPTION	PART #
8" x 8" Inspection Door	MW-ID08
12" x 12" Inspection Door	MW-ID12
16" x 16" Inspection Door	MW-ID16

Constructed of 12ga. Galvanized Material
Removable Safety Screen For Ease Of Installation
Adjustable Toggle Latch Clamp

OVERFLOW VALVE with Internal Diverter Gate

SIZE	PART #
8"	MW-OFV-08
10"	MW-OFV-10
12"	MW-OFV-12
14"	MW-OFV-14

CABLE WHEELS

DESCRIPTION	PART #
8" Cable Wheel without Handle	MW-CW08
8" Cable Wheel with Handle	MW-CW08H
12" Cable Wheel with Handle	MW-CW12H

Top-Dry Dump Chute Opener

DESCRIPTION	PART #
Designed To Be Used On Any Style Top Dry Includes Small Control Panel Compatible With Kahler, GSI or Any Other Style Of Controller ***Requires 120V Power Supply**	MW-Topdry Chute Opener

Custom Transitions & Fittings

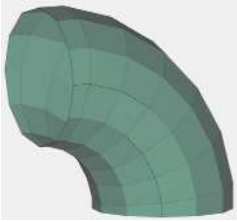

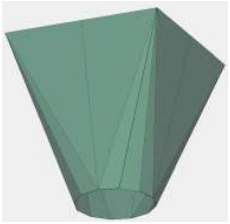

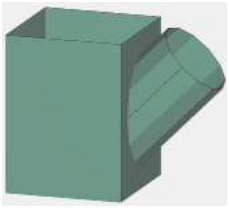

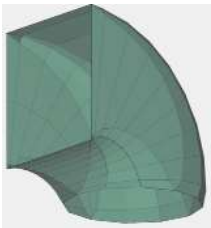

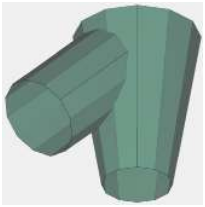

Between our TWO fabrication shops, we can build pretty much any fitting or transition you may need out a variety of material from stainless steel, mild steel or abrasion resistant (AR) steel.

Most custom work can be quoted or built on a time & materials basis

14 - Informational Pages

Equilibrium Moisture Content Chart	2-3
Grain Storage Life Wheel	4
V-Belt Length Calculator	5
Elevator Belt Speed Chart	5
Spouting Rated Capacities & Weights	6
Convert Bushel/Hour to Ton/Hour	7
GSI Floor Support Spacing	8-11
Sukup Floor Support Spacing	12-18

The below charts reflect the lowest grain can be dried
based on ambient temperature and relative humidity

CORN, YELLOW DENT (Wet Basis)													
	Relative Humidity												
	30%	**35%**	**40%**	**45%**	**50%**	**55%**	**60%**	**65%**	**70%**	**75%**	**80%**	**85%**	**90%**
35°	11.0	11.6	12.3	12.9	13.5	14.2	14.8	15.6	16.3	17.2	18.2	19.5	21.1
40°	10.6	11.3	11.9	12.5	13.1	13.8	14.5	15.2	16.0	16.9	17.9	19.1	20.8
45°	10.2	10.9	11.5	12.2	12.8	13.5	14.1	14.9	15.7	16.6	17.6	18.8	20.5
50°	9.9	10.6	11.2	11.8	12.5	13.1	13.8	14.6	15.4	16.3	17.3	18.6	20.2
55°	9.6	10.2	10.9	11.5	12.2	12.8	13.5	14.3	15.1	16.0	17.0	18.3	20.0
60°	9.3	9.9	10.6	11.2	11.9	12.6	13.3	14.0	14.8	15.7	16.8	18.1	19.7
65°	9.0	9.7	10.3	11.0	11.6	12.3	13.0	13.8	14.6	15.5	16.5	17.8	19.5
70°	8.7	9.4	10.0	10.7	11.4	12.0	12.7	13.5	14.3	15.3	16.3	17.6	19.3
75°	8.5	9.1	9.8	10.4	11.1	11.8	12.5	13.3	14.1	15.0	16.1	17.4	19.1
80°	8.2	8.9	9.6	10.2	10.9	11.6	12.3	13.1	13.9	14.8	15.9	17.2	18.9

SOYBEAN (Wet Basis)													
	Relative Humidity												
	30%	**35%**	**40%**	**45%**	**50%**	**55%**	**60%**	**65%**	**70%**	**75%**	**80%**	**85%**	**90%**
35°	6.6	7.5	8.3	9.1	9.9	10.8	11.7	12.6	13.7	14.8	16.1	17.7	19.7
40°	6.4	7.3	8.1	8.9	9.8	10.6	11.5	12.5	13.5	14.6	16.0	17.5	19.6
45°	6.3	7.1	8.0	8.8	9.6	10.5	11.4	12.3	13.4	14.5	15.8	17.4	19.5
50°	6.1	7.0	7.8	8.6	9.5	10.3	11.2	12.2	13.2	14.4	15.7	17.3	19.4
55°	5.9	6.8	7.7	8.5	9.3	10.2	11.1	12.1	13.1	14.2	15.6	17.2	19.2
60°	5.8	6.7	7.5	8.3	9.2	10.1	11.0	11.9	13.0	14.1	15.4	17.0	19.1
65°	5.6	6.5	7.4	8.2	9.0	9.9	10.8	11.8	12.8	14.0	15.3	16.9	19.0
70°	5.5	6.4	7.2	8.1	8.9	9.8	10.7	11.7	12.7	13.9	15.2	16.8	18.9
75°	5.3	6.2	7.1	7.9	8.8	9.7	10.6	11.5	12.6	13.7	15.1	16.7	18.8
80°	5.2	6.1	6.9	7.8	8.6	9.5	10.4	11.4	12.5	13.6	15.0	16.6	18.7

BARLEY (Wet Basis)													
	Relative Humidity												
	30%	**35%**	**40%**	**45%**	**50%**	**55%**	**60%**	**65%**	**70%**	**75%**	**80%**	**85%**	**90%**
35°	8.8	9.4	9.9	10.5	11.0	11.6	12.2	12.9	13.6	14.4	15.3	16.5	18.0
40°	8.7	9.2	9.8	10.4	10.9	11.5	12.1	12.8	13.5	14.3	15.2	16.4	17.9
45°	8.5	9.1	9.7	10.2	10.8	11.4	12.0	12.7	13.4	14.2	15.1	16.3	17.8
50°	8.4	9.0	9.6	10.1	10.7	11.3	11.9	12.6	13.3	14.1	15.0	16.2	17.7
55°	8.3	8.9	9.5	10.0	10.6	11.2	11.8	12.5	13.2	14.0	14.9	16.1	17.6
60°	8.2	8.8	9.3	9.9	10.5	11.1	11.7	12.4	13.1	13.9	14.8	16.0	17.5
65°	8.1	8.7	9.2	9.8	10.4	11.0	11.6	12.3	13.0	13.8	14.7	15.9	17.4
70°	8.0	8.6	9.1	9.7	10.3	10.9	11.5	12.2	12.9	13.7	14.6	15.8	17.3
75°	7.9	8.5	9.0	9.6	10.2	10.8	11.4	12.1	12.8	13.6	14.6	15.7	17.2
80°	7.8	8.4	8.9	9.5	10.1	10.7	11.3	12.0	12.7	13.5	14.5	15.6	17.1

The below charts reflect the lowest grain can be dried based on ambient temperature and relative humidity

WHEAT, Hard (Wet Basis)

Relative Humidity

	30%	35%	40%	45%	50%	55%	60%	65%	70%	75%	80%	85%	90%
35°	10.8	11.4	12.0	12.6	13.2	13.8	14.5	15.2	15.9	16.8	17.8	19.0	20.6
40°	10.5	11.1	11.7	12.4	13.0	13.6	14.3	15.0	15.7	16.6	17.6	18.8	20.4
45°	10.3	10.0	11.5	12.1	12.8	13.4	14.1	14.8	15.5	16.4	17.4	18.6	20.2
50°	10.1	10.7	11.3	11.9	12.6	13.2	13.9	14.6	15.3	16.2	17.0	18.4	19.9
55°	9.9	10.5	11.1	11.7	12.4	13.0	13.7	14.4	15.2	16.0	17.0	18.3	19.9
60°	9.7	10.3	10.9	11.5	12.2	12.8	13.5	14.2	15.0	15.9	16.9	18.1	19.7
65°	9.5	10.1	10.7	11.4	12.0	12.6	13.3	14.0	14.8	15.7	16.7	17.9	19.6
70°	9.3	9.9	10.6	11.2	11.8	12.5	13.1	13.9	14.7	15.5	16.6	17.8	19.4
75°	9.1	9.8	10.4	11.0	11.7	12.3	13.0	13.7	14.5	15.4	16.4	17.6	19.3
80°	9.0	9.6	10.2	10.9	11.5	12.1	12.8	13.6	14.3	15.2	16.3	17.5	19.1

WHEAT, Soft (Wet Basis)

Relative Humidity

	30%	35%	40%	45%	50%	55%	60%	65%	70%	75%	80%	85%	90%
35°	10.5	11.0	11.5	11.9	12.4	12.9	13.4	13.9	14.5	15.1	15.9	16.9	18.1
40°	10.3	10.8	11.2	11.7	12.1	12.6	13.1	13.7	14.3	14.9	15.7	16.6	17.9
45°	10.1	10.5	11.0	11.5	11.9	12.4	12.9	13.5	14.1	14.7	15.5	16.4	17.7
50°	9.9	10.3	10.8	11.2	11.7	12.2	12.7	13.3	13.9	14.5	15.3	16.3	17.5
55°	9.7	10.1	10.6	11.1	11.5	12.0	12.5	13.1	13.7	14.3	15.1	16.1	17.4
60°	9.5	9.9	10.4	10.9	11.3	11.8	12.3	12.9	13.5	14.2	15.0	15.9	17.2
65°	9.3	9.8	10.2	10.7	11.2	11.7	12.2	12.7	13.3	14.0	14.8	15.8	17.0
70°	9.1	9.6	10.0	10.5	11.0	11.5	12.0	12.6	13.2	13.8	14.6	15.6	16.9
75°	8.9	9.4	9.9	10.4	10.8	11.3	11.8	12.4	13.0	13.7	14.5	15.5	16.8
80°	8.8	9.3	9.7	10.2	10.7	11.2	11.7	12.3	12.9	13.6	14.4	15.3	16.6

WHEAT, Durum (Wet Basis)

Relative Humidity

	30%	35%	40%	45%	50%	55%	60%	65%	70%	75%	80%	85%	90%
35°	9.5	10.1	10.7	11.4	12.0	12.6	13.3	14.0	14.7	15.6	16.6	17.8	19.4
40°	9.4	10.0	10.6	11.2	11.9	12.5	13.2	13.9	14.6	15.5	16.5	17.7	19.3
45°	9.3	9.9	10.5	11.1	11.8	12.4	13.1	13.8	14.5	15.4	16.4	17.6	19.2
50°	9.2	9.8	10.4	11.0	11.7	12.3	13.0	13.7	14.4	15.3	16.3	17.5	19.1
55°	9.1	9.7	10.3	10.9	11.6	12.2	12.9	13.6	14.3	15.2	16.2	17.4	19.0
60°	9.0	9.6	10.2	10.8	11.5	12.1	12.8	13.5	14.3	15.1	16.1	17.3	18.9
65°	8.9	9.5	10.1	10.8	11.4	12.0	12.7	13.4	14.2	15.0	16.0	17.3	18.9
70°	8.8	9.4	10.1	10.7	11.3	11.9	12.6	13.3	14.1	15.0	16.0	17.2	18.8
75°	8.7	9.3	10.0	10.6	11.2	11.8	12.5	13.2	14.0	14.9	15.9	17.1	18.7
80°	8.6	9.3	9.9	10.5	11.1	11.7	12.4	13.1	13.9	14.8	15.8	17.0	18.6

Main Office
1110 Clyde Marengo Road
Clyde, NY 14433
PH: 315-923-9118

A.N. MARTIN SYSTEMS

Pavilion Office
7695 Big Tree Road
Pavilion, NY 14525
PH: 585-584-9210

Grain Storage Life Wheel

Fahrenheit

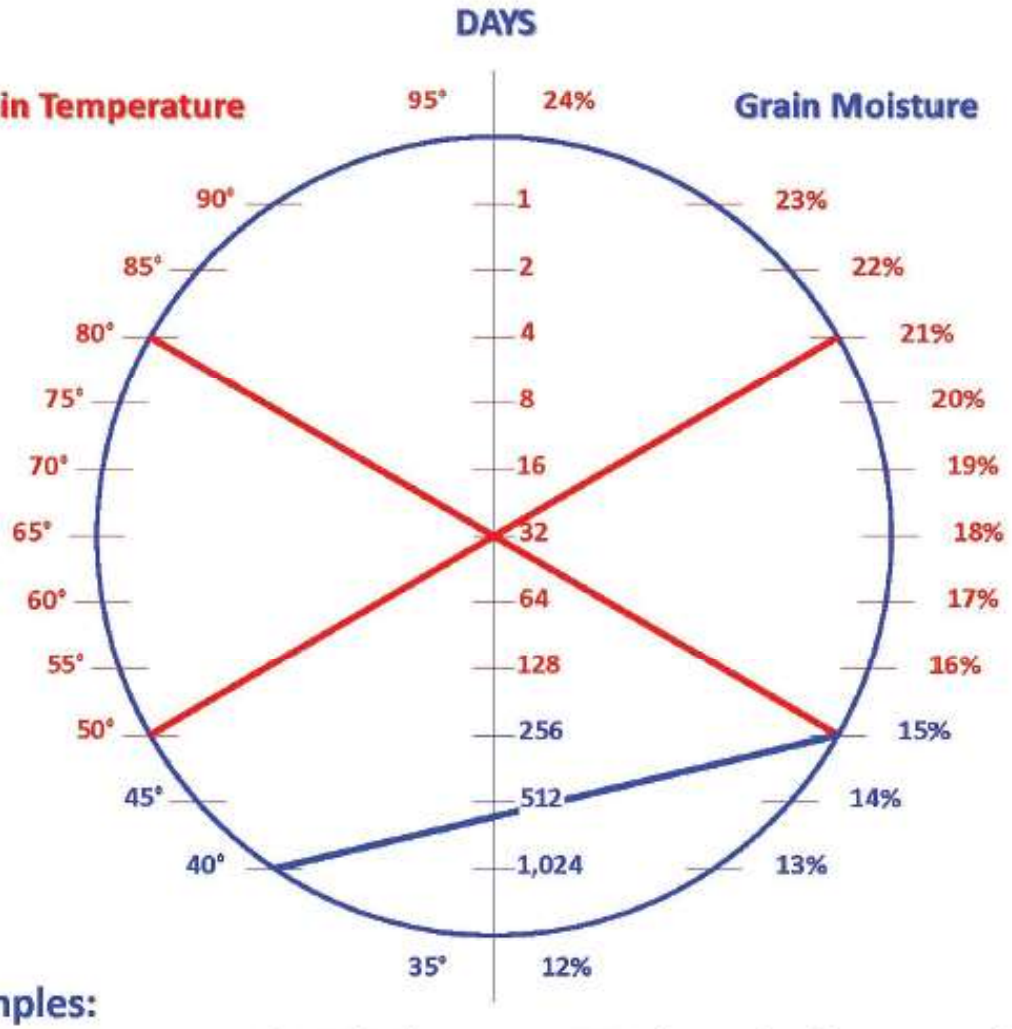

Examples:

15% moisture corn @ 40° F has over 512 days of safe storage life.

15% moisture corn @ 80° F has about 32 days of safe storage life.

21% moisture corn @ 50° F has about 32 days of safe storage life.

* Based on 1/2% dry matter decomposition.
Safe storage periods shown above 75° F and 25% moisture content are extremely unstable.
Grain can and will go out of condition rapidly in an unstable state.

This is approximate only. Safe grain storage life may vary.

BELT LENGTH CALCULATION

Broken belt that is old, worn and you can't make out a single word on it? Get out a tape measure and the calculator. With a couple of quick measurements, you can find what length belt you need.

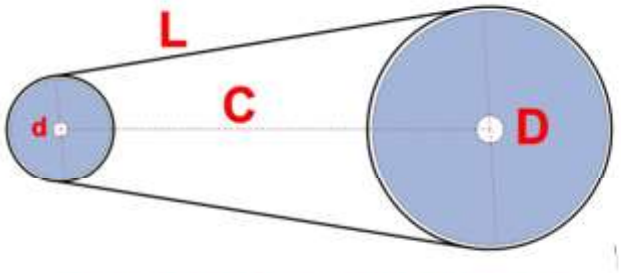

C = Center to center distance
d = Diameter of small pulley
D = Diameter of large pulley
L = Length of belt

Formula:

$$2C + 1.57(D+d) + \frac{(D-d)^2}{4C} = L$$

ELEVATOR PULLEY DIAMETERS & BELT SPEEDS

This table is provided as a general reference only and does not mean all products will properly discharge over the entire speed range.

Bucket Projection (Inches)	Head Pulley Dia. (Inches)	Head Pulley Circ. (Feet)	Speeds			
			RPM		FPM	
			MIN	MAX	MIN	MAX
3	8	2.09	85	170	178	356
3	10	2.62	85	170	223	445
3, 4	12	3.14	75	145	236	456
3, 4	14	3.67	65	120	238	440
3, 4	16	4.19	55	100	230	419
3, 4, 5	18	4.71	55	90	259	424
3, 4, 5	20	5.24	55	85	288	445
3, 4, 5	22	5.76	55	85	288	445
4, 5, 6	24	6.28	42	90	264	503
4, 5, 6	30	7.85	42	90	330	628
5, 6, 7	36	9.42	42	90	396	754
5, 6, 7	42	11	40	70	440	770
6, 7, 8	48	12.57	40	65	503	817
6, 7, 8	54	14.14	40	65	566	919
6, 7, 8	60	15.71	40	60	628	942
7, 8	72	18.85	40	55	754	1037
7, 8	84	22	34	50	748	110
7, 8	96	25.13	30	45	754	1131

ROUND SPOUTING CAPACITIES

For general reference only. Figures are based on 70 bushels per square inch with corn, soybeans and spouting at 40° or greater. Wet corn should be spouted no less than 45° and capacities do not apply

Diamater	Sq. Inches	BPH
6	28.3	1,500
8	50.3	3,500
10	78.5	5,500
12	113.1	8,000
14	154	10,500
16	201.1	14,000
18	254.5	18,000
20	314.2	22,000
22	380.1	27,000
24	452.3	32,000
26	530.9	37,000

ROUND SPOUTING WEIGHTS

(Lbs per Foot)

Diamater	14 Ga. 0.0747"	12 Ga. 0.1046"	11 Ga. 0.125"	10 Ga. 0.1345"	7 Ga. 0.1793"	1/4" Wall 0.25"
4"	3.2	4.5		5.7		
6"	4.8	6.8		8.6	11.6	15.3
8"	6.5	9.0	10.3	11.6	15.6	20.7
10"		11.3	12.8	14.5	19.7	26.0
12"		13.6		17.5	23.7	31.4
14"		15.9		20.4	27.7	36.7
16"		18.2		23.4	31.7	42.1
18"						48.0
20"						53.0
24"						64.0

CONVERT BPH to TPH (US or Metric)

BPH x 1.3 = SUM x Pounds per Cubic Foot = SUM ÷ 2000* = TPH

Pounds per Cubic Feet Key:
- Soybeans: 60
- Corn: 45
- Pellets: 55-60
- Feed: 35
- Wheat: 48
- DDGs: 30

*Divide by 2,000 for US TPH
Divide by 2,200 for Metric TPH

AUGER RPM CALCULATION

FOR STRAIGHT PULLY REDUCTION (no gearbox)

Drive Pulley Diameter x Motor RPM = SUM ÷ Driven Pulley Diameter = Auger RPM

FOR AUGER WITH A REDUCTION GEARBOX

Drive Pulley Diameter x Motor RPM = SUM ÷ Driven Pulley Diameter = SUM ÷ Auger RPM

20 GA. FLOOR SUPPORT REQUIREMENTS

Narrow/2.66" Corrugation - 20 Gauge Grandstand Floor Support Chart

FULL FLOOR SUPPORTS REQUIRED FOR PLANK TYPE FLOORING 2.66" CORRUGATION

* Based upon 13.5" or taller floor heights

Dia.	12'	15'	18'	21'	24'	27'	30'	33'	36'	39'	42'	45'	48'	54'	60'	72'	75'	78'
Rings																		
3	57/27 62																	
4	54/27 62	58/29 80	54/27 120															
5	54/27 62	58/29 80	54/27 120	52/26 160	56/28 205	54/27 249	54/27 304	50/25 390	50/25 470	50/25 762								
6	54/27 62	54/27 88	54/27 120	52/26 160	52/26 215	48/24 275	50/25 333	50/25 390	48/24 487	48/24 780	48/24 860	48/24 996	48/24 1070	44/22 1406	44/22 1590			
7	54/27 62	52/26 96	48/24 138	50/25 168	48/24 225	48/24 275	48/24 347	46/23 425	44/22 523	46/23 806	44/22 980	44/22 1056	44/22 1150	42/21 1548	42/21 1650			
8	48/24 70	48/24 100	48/24 144	46/23 182	46/23 230	46/23 300	44/22 363	44/22 435	44/22 523	44/22 832	42/21 1010	42/21 1144	42/21 1260	40/20 1568	40/20 1730			
9	48/24 70	48/24 100	42/21 144	42/21 190	42/21 243	44/22 303	42/21 387	42/21 465	40/20 565	42/21 882	40/20 1040	40/20 1194	40/20 1300	38/19 1570	36/18 1960			
10	42/21 75	42/21 110	42/21 144	42/21 190	42/21 250	42/21 309	40/20 397	40/20 479	38/19 597	38/19 888	38/19 1010	36/18 1202	36/18 1320	34/17 1616	34/17 2160			
11	42/21 75	42/21 110	42/21 144	42/21 190	40/20 265	40/20 319	38/19 417	36/18 525	36/18 620	36/18 950	34/17 1030	34/17 1178	34/17 1370	32/16 1688	32/16 2270			
12	38/19 80	40/20 115	40/20 154	40/20 202	38/19 280	38/19 345	36/18 441	34/17 550	34/17 659	34/17 978	32/16 1080	32/16 1232	32/16 1370	30/15 1792	30/15 2380	26/13 3482	26/13 4136	26/13 4443
13	38/19 80	38/19 120	38/19 166	36/18 220	36/18 290	36/18 360	34/17 470	32/16 600	32/16 710	30/15 1010	30/15 1128	30/15 1312	28/14 1518	28/14 1896	26/13 2582	24/12 3860	24/12 4160	24/12 4500
14	34/17 90	34/17 130	34/17 180	34/17 230	34/17 300	34/17 380	32/16 500	30/15 630	30/15 750	28/14 1062	28/14 1182	26/13 1468	26/13 1622	26/13 2024	24/12 2680	22/11 4161	22/11 4744	22/11 5099
15	32/16 95	32/16 140	32/16 190	32/16 250	32/16 320	32/16 400	30/15 520	28/14 670	28/14 790	26/13 1136	26/13 1264	24/12 1640	24/12 1768	24/12 2258	22/11 2842	22/11 4161	20/10 4892	20/10 5280
16	30/15 100	30/15 150	30/15 205	30/15 260	28/14 360	28/14 450	28/14 550	28/14 670	26/13 840	24/12 1268	24/12 1388	24/12 1640	22/11 1942	22/11 2416	20/10 3082	20/10 4530	20/10 4892	18/9 5928
17	28/14 106	28/14 160	28/14 215	26/13 290	26/13 380	26/13 480	26/13 590	26/13 710	24/12 900	24/12 1268	22/11 1578	22/11 1764	20/10 2098	20/10 2612	20/10 3082	18/9 4924	18/9 5490	18/9 5928
18	26/13 110	26/13 170	24/12 240	24/12 310	24/12 400	24/12 510	24/12 630	24/12 760	24/12 900	22/11 1348	22/11 1578	20/10 1910	20/10 2098	18/9 2860	18/9 3484	16/8 5390	16/8 5965	16/8 6582
19		24/12 180	24/12 240	22/11 340	22/11 440	22/11 550	22/11 680	22/11 820	22/11 970	22/11 1348	20/10 1626	20/10 1910	18/9 2280	18/9 2860	16/8 3852	16/8 5390	16/8 5965	16/8 6582
20		22/11 190	22/11 260	22/11 340	22/11 440	22/11 550	20/10 740	20/10 890	20/10 1060	20/10 1442	20/10 1626	18/9 2040	18/9 2280	16/8 3076	16/8 3852	14/7 6106	14/7 6730	14/7 7271
21				20/10 370	20/10 470	20/10 740	20/10 740	20/10 890	20/10 1060	20/10 1442	18/9 1770	18/9 2040	16/8 2436	16/8 3076	14/7 4240	14/7 6106	14/7 6730	14/7 7271
22				18/9 400	18/9 520	18/9 660	18/9 810	18/9 970	18/9 1160	18/9 1530	18/9 1770	16/8 2218	16/8 2436	16/8 3076	14/7 4240	12/6 6978	12/6 7677	12/6 8304
23				18/9 400	18/9 520	16/8 730	16/8 900	16/8 1080	16/8 1290	16/8 1684	16/8 1878	16/8 2218	16/8 2436	14/7 3634	14/7 4240	12/6 6978	12/6 7677	12/6 8304
24				16/8 450	16/8 580	16/8 730	16/8 900	16/8 1080	16/8 1290	16/8 1684	16/8 1878	16/8 2218	14/7 2734	14/7 3634	12/6 4840	12/6 6978	12/6 7677	
25				14/7 500	14/7 650	14/7 820	14/7 1010	14/7 1220	14/7 1450	14/7 1892	14/7 2116	14/7 2492	14/7 2734	14/7 3634	12/6 4840			
26						14/7 820	14/7 1010	14/7 1220	14/7 1450	14/7 1892	14/7 2116	14/7 2492	14/7 2734	12/6 3994	12/6 4840			
27						12/6 950	12/6 1160	12/6 1410	12/6 1670	12/6 2126	12/6 2386	12/6 2856	12/6 3118	12/6 3994	12/6 4840			
28						12/6 950	12/6 1160	12/6 1410	12/6 1670	12/6 2126	12/6 2386	12/6 2856	12/6 3118	12/6 3994				
29						12/6 950	12/6 1160	12/6 1410	12/6 1670	12/6 2126								

SUPPORT SPACING
SUPPORT QUANTITY

Floor styles List In Order of increasing Strength
18 Ga. COR-LOK
CUT-LOK

18 Ga. COR-LOK or CUT-LOK if Dia. & No. of Rings are in shaded area.

CUT-LOK only if Dia. and No. of Rings are in bottom unshaded area.

SUPPORT SPACING
SUPPORT QUANTITY

Dura-Lok floors and monorail supports are req'd. if Dia. and No. of rings are in bottom unshaded area.

*** For Aeration Systems recessed in the concrete add one ring for proper spacing.**

Quantities of Grandstands are minimum required for installation - Due to varying conditions and construction techniques at floor and wall penetrations additional supports may need to be ordered.

20 GA. FLOOR SUPPORT REQUIREMENTS

Wide/4" Corrugation - 20 Gauge Grandstand Floor Support Chart

FULL FLOOR SUPPORTS REQUIRED FOR PLANK TYPE FLOORING 4" CORRUGATION																		
* Based upon 13.5" or taller floor heights																		
Dia.	12'	15'	18'	21'	24'	27'	30'	33'	36'	39'	42'	45'	48'	54'	60'	72'	75'	78'
Rings	SUPPORT SPACING SUPPORT QUANTITY																	
3	54/27 62	58/29 80	54/27 120	52/26 150	56/28 202	54/27 249	50/25 333	50/25 390	50/25 470	50/25 762	46/23 880	52/26 948	48/24 1070					
4	54/27 62	54/27 88	54/27 120	52/26 160	52/26 214	48/24 275	50/25 333	50/25 390	50/25 470	50/25 762	46/23 880	48/24 996	48/24 1070	46/23 1376	44/22 1590			
5	54/27 62	52/26 96	48/24 138	50/25 168	48/24 224	48/24 275	48/24 347	46/23 425	44/22 523	46/23 806	46/23 880	44/22 1056	44/22 1150	42/21 1548	42/21 1650			
6	48/24 70	48/24 100	48/24 138	46/23 182	46/23 230	44/22 303	44/22 363	44/22 435	44/22 523	42/21 882	42/21 1010	42/21 1144	42/21 1260	40/20 1568	38/19 1842	18 Ga. COR-LOK or CUT-LOK if Dia. & No. of Rings are in shaded area.		
7	42/21 75	42/21 110	42/21 144	42/21 190	42/21 249	42/21 309	42/21 387	40/20 480	40/20 565	40/20 908	38/19 1010	38/19 1166	38/19 1270	36/18 1638	34/17 2160			
8	42/21 75	42/21 110	42/21 144	42/21 190	40/20 265	40/20 319	38/19 417	36/18 525	36/18 620	36/18 950	34/17 1030	34/17 1178	34/17 1370	32/16 1688	32/16 2270	28/14 3272		
9	38/19 80	40/20 115	38/19 166	38/19 220	38/19 277	36/18 355	34/17 471	34/17 555	32/16 695	32/16 958	32/16 1080	30/15 1312	30/15 1450	30/15 1792	28/14 2350	28/14 3272	24/12 4160	24/12 4500
10	36/18 90	34/17 130	34/17 180	34/17 230	34/17 300	34/17 380	32/16 500	32/16 600	30/15 750	28/14 1062	30/15 1128	28/14 1386	28/14 1518	26/13 2024	24/12 2680	22/11 4161	22/11 4744	22/11 5099
11	32/16 95	30/15 150	32/16 190	32/16 250	32/16 320	32/16 400	30/15 520	30/15 650	28/14 790	26/13 1136	26/13 1264	24/12 1640	24/12 1768	24/12 2258	22/11 2842	20/10 4530	20/10 4892	20/10 5280
12	28/14 100	28/14 160	28/14 210	28/14 280	28/14 360	28/14 450	28/14 550	28/14 670	26/13 840	24/12 1268	24/12 1388	22/11 1764	22/11 1942	20/10 2612	20/10 3082	18/9 4924	18/9 5490	18/9 5928
13	26/13 110	26/13 170	26/13 220	26/13 290	24/12 400	24/12 510	24/12 630	24/12 760	24/12 900	22/11 1348	22/11 1578	20/10 1910	20/10 2098	18/9 2860	18/9 3484	16/8 5390	16/8 5965	16/8 6582
14			22/11 260	22/11 340	22/11 440	22/11 550	22/11 680	22/11 820	20/10 1060	20/10 1442	20/10 1626	18/9 2040	18/9 2280	16/8 3076	16/8 3852	16/8 5390	16/8 5965	16/8 6582
15				20/10 370	20/10 480	20/10 600	20/10 740	20/10 890	20/10 1060	18/9 1530	18/9 1770	18/9 2040	16/8 2436	16/8 3076	16/8 3852	14/7 6106	14/7 6730	14/7 7271
16				18/9 400	18/9 520	18/9 660	18/9 810	18/9 970	18/9 1160	18/9 1530	18/9 1770	16/8 2218	16/8 2436	16/8 3076	14/7 4240	12/6 6978	12/6 7677	12/6 8304
17					16/8 580	16/8 730	16/8 900	16/8 1080	16/8 1290	16/8 1684	16/8 1878	16/8 2218	16/8 2436	14/7 3634	14/7 4240	12/6 6978	12/6 7677	12/6 8304
18					16/8 580	16/8 730	16/8 900	16/8 1080	16/8 1290	16/8 1684	16/8 1878	16/8 2218	14/7 2734	14/7 3634	12/6 4840	SUPPORT SPACING SUPPORT QUANTITY		
19	CUT-LOK only if Dia. & No. of Rings are in the bottom unshaded area.					14/7 820	14/7 1010	14/7 1220	14/7 1450	14/7 1892	14/7 2116	14/7 2492	14/7 2734	12/6 3994	12/6 4840	Dura-Lok floors and monorail supports are req'd. if Dia. and No. of rings are in bottom unshaded area.		
20						12/6 950	12/6 1160	12/6 1410	12/6 1670	12/6 2126	12/6 2386	12/6 2856	12/6 3118	12/6 3994				
21						12/6 950	12/6 1160	12/6 1410	12/6 1670	12/6 2126	12/6 2386	12/6 2856	12/6 3118					

*** For Aeration Systems recessed in the concrete add one ring for proper spacing.**

Quantities of Grandstands are minimum required for installation - Due to varying conditions and construction techniques at floor and wall penetrations additional supports may need to be ordered.

Floor styles in order of increasing strength are… 18 Ga. Cor-Lok, Cut-Lok and Dura-Lok.

DURA-LOK Rail Span Minimum (Inches)

4" Ring	2.66" Ring	Eave Height (ft.)	Bin Diameter												
			15'	18'	21'	24'	27'	30'	33'	36'	42'	48'	54'	60'	72'
3	4	11'	26	26	26	26	26	26	26	26	26	26	26	26	26
4	6	16'	26	26	26	26	26	26	26	26	26	26	26	26	26
5	8	22'	26	26	26	26	26	26	26	26	26	26	26	26	22
7	10	27'	26	26	26	26	26	26	26	26	22	22	22	22	22
9	12	33'	26	26	26	22	22	22	22	22	22	22	22	22	22
10	14	38'	22	22	22	22	22	22	22	22	22	22	20	20	20
11	16	43'	22	22	22	22	22	22	22	22	20	20	20	20	20
13	18	48'	20	20	20	20	20	20	20	20	20	20	18	18	18
14	20	54'	20	20	20	20	20	20	20	20	20	18	18	18	18
16	22	59'	18	18	18	18	18	18	18	18	18	18	18	18	17
17	24	64'	18	18	18	18	18	18	18	18	18	18	18	17	17
19	26	70'	18	18	18	18	18	18	18	17	17	17	17	17	16
20	28	75'	17	17	17	17	17	17	17	17	17	17	17	16	16
22	30	81'	16	16	16	16	16	16	16	16	16	16	16	16	15
23	32	86'	16	16	16	16	16	16	16	16	16	16	16	16	15
25	34	92'	15	15	15	15	15	15	15	15	15	15	15	15	15

DURA-LOK Leg Spacing Chart (In./Qty.)

4" Ring	2.66" Ring	Eave Height (ft.)	Bin Diameter												
			15'	18'	21'	24'	27'	30'	33'	36'	42'	48'	54'	60'	72'
3	4	11'	30/60	29/80	29/110	28/130	28/160	27/210	27/250	26/290	25/440	25/560	27/710	23/900	22/1290
4	6	16'	26/70	25/100	25/120	25/150	24/190	24/230	24/280	23/320	23/480	22/630	22/770	21/980	20/1410
5	8	22'	24/80	23/100	22/140	22/170	21/210	21/260	21/320	21/350	20/550	20/690	20/840	19/1070	20/1620
7	10	27'	21/90	21/110	21/150	20/180	20/220	20/280	19/350	19/390	20/610	20/780	20/950	19/1200	19/1700
9	12	33'	19/90	19/120	19/160	21/190	20/250	20/310	20/370	19/440	19/640	19/820	18/1050	18/1280	18/1790
10	14	38'	20/100	20/130	20/170	19/210	19/260	19/320	19/390	18/470	18/670	18/860	18/1140	18/1400	18/1950
11	16	43'	18/110	18/150	18/190	18/220	18/270	18/340	18/410	18/470	18/720	18/920	17/1210	17/1480	17/2050
13	18	48'	18/110	18/150	18/190	18/240	18/300	18/370	18/450	18/500	17/760	17/970	18/1220	17/1610	17/2250
14	20	54'			17/200	17/250	17/320	17/390	17/470	17/530	17/760	17/1060	17/1280	17/1610	16/2390
16	22	59'			17/220	17/280	17/340	17/420	17/510	17/570	17/830	17/1060	16/1360	16/1700	16/2500
17	24	64'				17/280	17/340	17/420	17/510	17/570	17/830	16/1120	16/1360	16/1790	16/2500
19	26	70'				16/290	16/360	16/450	16/540	16/630	16/900	16/1180	16/1450	16/1790	16/2640
20	28	75'				16/300	16/370	16/460	16/560	16/630	16/900	16/1180	16/1450	16/1880	15/2810
22	30	81'					16/400	16/480	16/580	16/660	16/940	16/1240	16/1530	15/1990	15/2850
23	32	86'	12" Leg Part# FL-403-2					15/510	15/620	15/710	15/1000	15/1320	15/1630	15/1990	15/2850
25	34	92'	17" Leg Part# FL-403-3								15/1000	15/1310	15/1620	15/1990	15/2850

*** Quantities of legs are minimum required for installation.**
*** Due to varying conditions & construction techniques additional supports may need to be ordered.**
*** Refer to Page 5-5 for bundle quantities.**

SuperWave Supports Spacing

SUPERWAVE™ SUPPORT REQUIREMENTS FOR HEAVY DUTY, 20 GA. PERF. FLOORS

OF RINGS - SUKUP BINS (44" RING HEIGHT)

	3 & 4		5		6		7		8		9		10		11		12		13	
BIN	EAVE HEIGHT (FEET)																			
DIA.	16'		17' - 19'		20' - 22'		23' - 26'		27' - 30'		31' - 33'		34' - 37'		38' - 41'		42' - 44'		45' - 48'	
12'	10	44"	12	41"	12	42"	12	39"	16	37"	18	35"	18	33"	20	27"	20	26"	22	25"
	20h	6d	20h	6d	20h	6d	20h	6d	20h	6d	20h	6d	20h	6d	20h	6d	20h	6d	20h	6d
15'	22	42"	22	39"	22	37"	22	36"	22	36"	24	34"	26	33"	30	27"	34	25"	34	24"
	20h	6d	20h	6d	20h	6d	20h	6d	20h	6d	20h	6d	20h	6d	20h	6d	20h	6d	20h	6d
16' 5" (15M)	22	42"	22	38"	24	37"	26	36"	26	36"	28	34"	30	33"	36	26"	38	25"	38	24"
	20h	6d	20h	6d	20h	6d	20h	6d	20h	6d	20h	6d	20h	6d	20h	6d	20h	6d	20h	6d
18'	28	41"	32	38"	32	36"	36	34"	36	34"	36	34"	36	32"	44	26"	44	25"	46	24"
	20h	6d	20h	6d	20h	6d	20h	6d	20h	6d	20h	6d	20h	6d	20h	6d	20h	6d	20h	6d
18' 7"	38	41"	38	38"	40	36"	40	34"	40	34"	40	34"	42	32"	50	26"	52	25"	56	24"
	20h	6d	20h	6d	20h	6d	20h	6d	20h	6d	20h	6d	20h	6d	20h	6d	20h	6d	20h	6d
19'	38	41"	38	38"	40	35"	40	34"	40	34"	40	34"	42	32"	50	26"	52	25"	56	24"
	20h	6d	20h	6d	20h	6d	20h	6d	20h	6d	20h	6d	20h	6d	20h	6d	20h	6d	20h	6d
19' 8" (6M)	38	41"	40	37"	42	35"	44	33"	46	32"	46	32"	46	32"	56	26"	60	25"	62	24"
	20h	6d	20h	6d	20h	6d	20h	6d	20h	6d	20h	6d	20h	6d	20h	6d	20h	6d	20h	6d
21'	40	41"	44	37"	48	34"	50	33"	52	32"	52	32"	52	32"	60	26"	62	25"	64	24"
	20h	6d	20h	6d	20h	6d	20h	6d	20h	6d	20h	6d	20h	6d	20h	6d	20h	6d	20h	6d
21' 8"	46	41"	48	37"	54	34"	54	33"	56	32"	58	30"	58	30"	68	26"	72	25"	72	24"
	20h	6d	20h	6d	20h	6d	20h	6d	20h	6d	20h	6d	20h	6d	20h	6d	20h	6d	20h	6d
22' 11" (7M)	46	40"	56	36"	58	33"	62	31"	64	30"	66	29"	66	29"	72	26"	72	25"	82	23"
	20h	6d	20h	6d	20h	6d	20h	6d	20h	6d	20h	6d	20h	6d	20h	6d	20h	6d	20h	6d
24'	56	39"	62	36"	64	33"	66	31"	70	30"	72	29"	74	28"	84	25"	86	24"	90	23"
	30h	6d	30h	6d	30h	6d	30h	6d	30h	6d	30h	6d	30h	6d	30h	6d	30h	6d	30h	6d
24' 9"	60	39"	64	36"	64	33"	76	31"	78	30"	82	28"	82	28"	90	25"	92	24"	94	23"
	30h	6d	30h	6d	30h	6d	30h	6d	30h	6d	30h	6d	30h	6d	30h	6d	30h	6d	30h	6d
26' 3" (8M)	64	39"	68	36"	74	33"	80	31"	82	29"	82	28"	82	28"	96	25"	100	24"	104	23"
	30h	6d	30h	6d	30h	6d	30h	6d	30h	6d	30h	6d	30h	6d	30h	6d	30h	6d	30h	6d
27'	70	39"	72	36"	80	33"	84	31"	88	29"	94	28"	94	28"	102	25"	106	24"	112	23"
	30h	6d	30h	6d	30h	6d	30h	6d	30h	6d	30h	6d	30h	6d	30h	6d	30h	6d	30h	6d
27' 10"	72	39"	84	35"	86	33"	90	31"	98	29"	100	28"	102	27"	112	25"	116	24"	118	23"
	30h	6d	30h	6d	30h	6d	30h	6d	30h	6d	30h	6d	30h	6d	30h	6d	30h	6d	30h	6d
29' 6" (9M)	86	38"	92	35"	96	33"	106	31"	112	29"	114	28"	120	27"	126	25"	132	24"	140	23"
	30h	6d	30h	6d	30h	6d	30h	6d	30h	6d	30h	6d	30h	6d	30h	6d	30h	6d	30h	6d
30'	88	37"	94	34"	98	32"	110	30"	114	28"	120	27"	122	26"	126	25"	132	24"	144	22"
	30h	6d	30h	6d	30h	6d	30h	6d	30h	6d	30h	6d	30h	6d	30h	6d	30h	6d	30h	6d
31'	96	37"	100	34"	108	32"	114	30"	118	28"	126	27"	132	26"	134	25"	142	24"	150	22"
	30h	6d	30h	6d	30h	6d	30h	6d	30h	6d	30h	6d	30h	6d	30h	6d	30h	6d	30h	6d
33'	106	37"	114	34"	122	32"	128	30"	136	28"	140	27"	148	26"	160	24"	160	24"	172	22"
	30h	6d	30h	6d	30h	6d	30h	6d	30h	6d	30h	6d	30h	6d	30h	6d	30h	6d	30h	6d
34'	110	37"	122	34"	128	32"	138	30"	148	28"	150	27"	162	25"	166	24"	178	23"	184	22"
	30h	6d	30h	6d	30h	6d	30h	6d	30h	6d	30h	6d	30h	6d	30h	6d	30h	6d	30h	6d
36'	132	36"	138	33"	150	31"	158	29"	170	27"	178	26"	182	25"	192	24"	198	23"	210	22"
	40h	6d	40h	6d	40h	6d	40h	6d	40h	6d	40h	6d	40h	6d	40h	6d	40h	6d	40h	6d
36' 1" (11M)	132	36"	138	33"	150	31"	158	29"	170	27"	178	26"	182	25"	192	24"	198	23"	210	22"
	40h	6d	40h	6d	40h	6d	40h	6d	40h	6d	40h	6d	40h	6d	40h	6d	40h	6d	40h	6d
37' 1"	136	36"	148	33"	158	31"	170	29"	180	27"	184	26"	194	25"	202	24"	210	23"	220	22"
	40h	6d	40h	6d	40h	6d	40h	6d	40h	6d	40h	6d	40h	6d	40h	6d	40h	6d	40h	6d
42' Split	208	35"	228	32"	234	30"	250	28"	258	27"	268	26"	280	25"	288	24"	298	23"	326	21"
	40h	6d	40h	6d	40h	6d	40h	6d	40h	6d	40h	6d	40h	6d	40h	6d	40h	6d	40h	6d
42' 8" (13M)	186	35"	206	32"	216	30"	238	28"	242	27"	254	26"	262	25"	268	24"	284	23"	308	21"
Split	40h	6d	40h	6d	40h	6d	40h	6d	40h	6d	40h	6d	40h	6d	40h	6d	40h	6d	40h	6d
43' 3" Split	186	35"	206	32"	216	30"	238	28"	242	27"	254	26"	268	24"	284	23"	284	23"	308	21"
	40h	6d	40h	6d	40h	6d	40h	6d	40h	6d	40h	6d	40h	6d	40h	6d	40h	6d	40h	6d
48' Split	272	34"	288	32"	304	30"	328	28"	336	27"	356	25"	374	24"	382	23"	382	23"	422	21"
	50h	6d	50h	6d	50h	6d	50h	6d	50h	6d	50h	6d	50h	6d	50h	6d	50h	6d	50h	6d
49' 3" (15M)	250	34"	274	31"	294	29"	298	28"	326	26"	340	25"	352	24"	366	23"	382	22"	422	20"
Split	50h	6d	50h	6d	50h	6d	50h	6d	50h	6d	50h	6d	50h	6d	50h	6d	50h	6d	50h	6d
54' Split	368	31"	392	29"	420	27"	432	26"	448	25"	460	24"	486	23"	500	22"	522	21"	548	20"
	50h	6d	50h	6d	50h	6d	50h	6d	50h	6d	50h	6d	50h	6d	50h	6d	50h	6d	50h	6d
55' 8" Split	364	31"	382	29"	410	27"	428	26"	440	25"	476	23"	476	23"	502	22"	524	21"	552	20"
	50h	6d	50h	6d	50h	6d	50h	6d	50h	6d	50h	6d	50h	6d	50h	6d	50h	6d	50h	6d
59' 1" (18M)	396	31"	422	29"	456	27"	470	26"	514	24"	532	23"	556	22"	556	22"	586	21"	608	20"
Split	60h	6d	60h	6d	60h	6d	60h	6d	60h	6d	60h	6d	60h	6d	60h	6d	60h	6d	60h	6d
60' Split	450	31"	480	29"	508	27"	532	26"	572	24"	592	23"	616	22"	616	22"	640	21"	676	20"
	60h	6d	60h	6d	60h	6d	60h	6d	60h	6d	60h	6d	60h	6d	60h	6d	60h	6d	60h	6d
61' 10" Split	440	31"	472	29"	502	27"	544	25"	560	24"	586	23"	618	22"	644	21"	644	21"	674	20"
	60h	6d	60h	6d	60h	6d	60h	6d	60h	6d	60h	6d	60h	6d	60h	6d	60h	6d	60h	6d
66' Split	526	29	568	27	592	26	638	24	666	23	698	22	724	21	724	21	766	20	802	19
	60	6	60	6	60	6	60	6	60	6	60	6	60	6	60	6	60	6	60	6
72' Split	698	28"	728	27"	778	25"	810	24"	846	23"	876	22"	916	21"	960	20"	960	20"	1004	19"
	70h	6d	70h	6d	70h	6d	70h	6d	70h	6d	70h	6d	70h	6d	70h	6d	70h	6d	70h	6d
75' Split	764	28"	818	26"	852	25"	882	24"	910	23"	954	22"	998	21"	1040	20"	1040	20"	1094	19"
	70h	6d	70h	6d	70h	6d	70h	6d	70h	6d	70h	6d	70h	6d	70h	6d	70h	6d	70h	6d
78' Double	860	28"	922	26"	954	25"	980	24"	1026	23"	1066	22"	1116	21"	1160	20"	1214	19"	1214	19"
Split	70h	6d	70h	6d	70h	6d	70h	6d	70h	6d	70h	6d	70h	6d	70h	6d	70h	6d	70h	6d
90' Double	1234	26"	1266	25"	1368	23"	1426	22"	1488	21"	1488	21"	1552	20"	1624	19"	1712	18"	1712	18"
Split	80h	6d	80h	6d	80h	6d	80h	6d	80h	6d	80h	6d	80h	6d	80h	6d	80h	6d	80h	6d
105' Double	1698	25"	1768	24"	1834	23"	1912	22"	1998	21"	2088	20"	2190	19"	2190	19"	2304	18"	2304	18"
Split	90h	6d	90h	6d	90h	6d	90h	6d	90h	6d	90h	6d	90h	6d	90h	6d	90h	6d	90h	6d

Key:

1	2
3	4

1 = Number of Full SuperWave Supports
3 = Number of Half SuperWave Supports (h)
2 = SuperWave Support Spacing in inches
4 = Number of Double Super Supports (d)

©10/16/2023

SuperWave Supports Spacing

SUPERWAVE™ SUPPORT REQUIREMENTS FOR HEAVY DUTY, 20 GA. PERF. FLOORS

OF RINGS - SUKUP BINS (44" RING HEIGHT)

	14	15	16	17	18	19	20	21	22	23	24
BIN	EAVE HEIGHT (FEET)										
DIA.	49' - 52'	53' - 56'	57' - 59'	60' - 63'	64' - 66'	67' - 70'	71' - 74'	75' - 78'	79' - 81'	82' - 85'	86' - 88'
12'	22 24" 20h 6d	22 23" 20h 6d	24 22" 20h 6d	24 22" 20h 6d	26 21" 20h 6d	26 20" 20h 6d	26 20" 20h 6d	28 19" 20h 6d	28 19" 20h 6d	28 19" 20h 6d	30 18" 20h 6d
15'	34 24" 20h 6d	36 23" 20h 6d	36 22" 20h 6d	38 21" 20h 6d	38 21" 20h 6d	38 20" 20h 6d	38 20" 20h 6d	40 19" 20h 6d	40 19" 20h 6d	40 19" 20h 6d	44 18" 20h 6d
16' 5" (15M)	38 24" 20h 6d	40 23" 20h 6d	40 22" 20h 6d	42 21" 20h 6d	42 21" 20h 6d	46 20" 20h 6d	46 20" 20h 6d	48 19" 20h 6d	48 19" 20h 6d	50 18" 20h 6d	50 18" 20h 6d
18'	46 24" 20h 6d	48 23" 20h 6d	50 22" 20h 6d	52 21" 20h 6d	52 21" 20h 6d	56 20" 20h 6d	56 20" 20h 6d	60 19" 20h 6d	60 19" 20h 6d	62 18" 20h 6d	62 18" 20h 6d
18' 7"	58 23" 20h 6d	58 23" 20h 6d	60 22" 20h 6d	60 21" 20h 6d	60 21" 20h 6d	64 20" 20h 6d	64 20" 20h 6d	66 19" 20h 6d	66 19" 20h 6d	72 18" 20h 6d	72 18" 20h 6d
19'	58 23" 20h 6d	58 23" 20h 6d	60 22" 20h 6d	60 21" 20h 6d	60 21" 20h 6d	64 20" 20h 6d	64 20" 20h 6d	66 19" 20h 6d	66 19" 20h 6d	72 18" 20h 6d	72 18" 20h 6d
19' 8" (6M)	62 23" 20h 6d	62 23" 20h 6d	64 22" 20h 6d	66 21" 20h 6d	66 21" 20h 6d	70 20" 20h 6d	70 20" 20h 6d	74 19" 20h 6d	74 19" 20h 6d	80 18" 20h 6d	80 18" 20h 6d
21'	68 23" 20h 6d	68 23" 20h 6d	70 22" 20h 6d	76 21" 20h 6d	76 21" 20h 6d	76 20" 20h 6d	76 20" 20h 6d	80 19" 20h 6d	80 19" 20h 6d	84 18" 20h 6d	84 18" 20h 6d
21' 8"	78 23" 20h 6d	78 23" 20h 6d	80 22" 20h 6d	80 21" 20h 6d	80 21" 20h 6d	86 20" 20h 6d	86 20" 20h 6d	92 19" 20h 6d	92 19" 20h 6d	94 18" 20h 6d	94 18" 20h 6d
22' 11" (7M)	86 22" 20h 6d	86 22" 20h 6d	88 21" 20h 6d	94 20" 20h 6d	94 20" 20h 6d	96 19" 20h 6d	96 19" 20h 6d	104 18" 20h 6d	104 18" 20h 6d	104 18" 20h 6d	110 17" 20h 6d
24'	90 22" 30h 6d	90 22" 30h 6d	96 21" 30h 6d	100 20" 30h 6d	100 20" 30h 6d	106 19" 30h 6d	106 19" 30h 6d	112 18" 30h 6d	112 18" 30h 6d	112 18" 30h 6d	116 17" 30h 6d
24' 9"	102 22" 30h 6d	102 22" 30h 6d	104 21" 30h 6d	108 20" 30h 6d	108 20" 30h 6d	114 19" 30h 6d	114 19" 30h 6d	122 18" 30h 6d	122 18" 30h 6d	122 18" 30h 6d	130 17" 30h 6d
26' 3" (8M)	108 22" 30h 6d	110 21" 30h 6d	110 21" 30h 6d	118 20" 30h 6d	118 20" 30h 6d	122 19" 30h 6d	122 19" 30h 6d	130 18" 30h 6d	130 18" 30h 6d	136 17" 30h 6d	136 17" 30h 6d
27'	116 22" 30h 6d	126 21" 30h 6d	126 21" 30h 6d	130 20" 30h 6d	130 20" 30h 6d	132 19" 30h 6d	132 19" 30h 6d	144 18" 30h 6d	144 18" 30h 6d	150 17" 30h 6d	150 17" 30h 6d
27' 10"	126 22" 30h 6d	132 21" 30h 6d	132 21" 30h 6d	134 20" 30h 6d	134 20" 30h 6d	146 19" 30h 6d	146 19" 30h 6d	152 18" 30h 6d	152 18" 30h 6d	158 17" 30h 6d	158 17" 30h 6d
29' 6" (9M)	144 22" 30h 6d	148 21" 30h 6d	148 21" 30h 6d	156 20" 30h 6d	156 20" 30h 6d	162 19" 30h 6d	162 19" 30h 6d	176 18" 30h 6d	176 18" 30h 6d	180 17" 30h 6d	180 17" 30h 6d
30'	148 21" 30h 6d	156 20" 30h 6d	156 20" 30h 6d	162 19" 30h 6d	162 19" 30h 6d	176 18" 30h 6d	176 18" 30h 6d	180 17" 30h 6d	180 17" 30h 6d	180 17" 30h 6d	194 16" 30h 6d
31'	162 21" 30h 6d	166 20" 30h 6d	166 20" 30h 6d	174 19" 30h 6d	174 19" 30h 6d	186 18" 30h 6d	186 18" 30h 6d	198 17" 30h 6d	198 17" 30h 6d	198 17" 30h 6d	202 16" 30h 6d
33'	182 21" 30h 6d	194 20" 30h 6d	194 20" 30h 6d	198 19" 30h 6d	198 19" 30h 6d	212 18" 30h 6d	212 18" 30h 6d	224 17" 30h 6d	224 17" 30h 6d	224 17" 30h 6d	236 16" 30h 6d
34'	196 21" 30h 6d	202 20" 30h 6d	202 20" 30h 6d	214 19" 30h 6d	214 19" 30h 6d	222 18" 30h 6d	222 18" 30h 6d	238 17" 30h 6d	238 17" 30h 6d	238 17" 30h 6d	254 16" 30h 6d
36'	218 21" 40h 6d	226 20" 40h 6d	226 20" 40h 6d	238 19" 40h 6d	238 19" 40h 6d	254 18" 40h 6d	254 18" 40h 6d	264 17" 40h 6d	264 17" 40h 6d	264 17" 40h 6d	280 16" 40h 6d
36' 1" (11M)	218 21" 40h 6d	226 20" 40h 6d	226 20" 40h 6d	238 19" 40h 6d	238 19" 40h 6d	254 18" 40h 6d	254 18" 40h 6d	264 17" 40h 6d	264 17" 40h 6d	264 17" 40h 6d	280 16" 40h 6d
37' 1"	226 21" 40h 6d	242 20" 40h 6d	242 20" 40h 6d	250 19" 40h 6d	250 19" 40h 6d	266 18" 40h 6d	266 18" 40h 6d	282 17" 40h 6d	282 17" 40h 6d	282 17" 40h 6d	298 16" 40h 6d
42' Split	334 20" 40h 6d	354 19" 40h 6d	354 19" 40h 6d	370 18" 40h 6d	370 18" 40h 6d	392 17" 40h 6d	392 17" 40h 6d	392 17" 40h 6d	410 16" 40h 6d	410 16" 40h 6d	438 15" 40h 6d
42' 8" (13M) Split	326 20" 40h 6d	340 19" 40h 6d	340 19" 40h 6d	362 18" 40h 6d	362 18" 40h 6d	382 17" 40h 6d	382 17" 40h 6d	382 17" 40h 6d	404 16" 40h 6d	404 16" 40h 6d	432 15" 40h 6d
43' 3" Split	326 20" 40h 6d	340 19" 40h 6d	340 19" 40h 6d	362 18" 40h 6d	362 18" 40h 6d	382 17" 40h 6d	382 17" 40h 6d	382 17" 40h 6d	404 16" 40h 6d	404 16" 40h 6d	432 15" 40h 6d
48' Split	436 20" 50h 6d	460 19" 50h 6d	460 19" 50h 6d	484 18" 50h 6d	484 18" 50h 6d	512 17" 50h 6d	512 17" 50h 6d	512 17" 50h 6d	538 16" 50h 6d	538 16" 50h 6d	570 15" 50h 6d
49' 3" (15M) Split	422 20" 50h 6d	440 19" 50h 6d	440 19" 50h 6d	468 18" 50h 6d	468 18" 50h 6d	492 17" 50h 6d	492 17" 50h 6d	522 16" 50h 6d	522 16" 50h 6d	522 16" 50h 6d	558 15" 50h 6d
54' Split	548 20" 50h 6d	576 19" 50h 6d	576 19" 50h 6d	606 18" 50h 6d	606 18" 50h 6d	640 17" 50h 6d	640 17" 50h 6d	680 16" 50h 6d	680 16" 50h 6d	680 16" 50h 6d	716 15" 50h 6d
55' 8" Split	552 20" 50h 6d	582 19" 50h 6d	610 18" 50h 6d	610 18" 50h 6d	610 18" 50h 6d	650 17" 50h 6d	650 17" 50h 6d	688 16" 50h 6d	688 16" 50h 6d	732 15" 50h 6d	732 15" 50h 6d
59' 1" (18M) Split	640 19" 60h 6d	640 19" 60h 6d	680 18" 60h 6d	680 18" 60h 6d	716 17" 60h 6d	716 17" 60h 6d	716 17" 60h 6d	764 16" 60h 6d	764 16" 60h 6d	806 15" 60h 6d	806 15" 60h 6d
60' Split	706 19" 60h 6d	706 19" 60h 6d	742 18" 60h 6d	742 18" 60h 6d	784 17" 60h 6d	784 17" 60h 6d	784 17" 60h 6d	832 16" 60h 6d	832 16" 60h 6d	880 15" 60h 6d	880 15" 60h 6d
61' 10" Split	708 19" 60h 6d	708 19" 60h 6d	748 18" 60h 6d	748 18" 60h 6d	794 17" 60h 6d	794 17" 60h 6d	794 17" 60h 6d	842 16" 60h 6d	842 16" 60h 6d	900 15" 60h 6d	900 15" 60h 6d
66' Split	802 19 60 6	848 18 60 6	848 18 60 6	898 17 60 6	898 17 60 6	954 16 60 6	954 16 60 6	1010 15 60 6	1010 15 60 6	1088 14 60 6	1088 14 60 6
72' Split	1060 18" 70h 6d	1060 18" 70h 6d	1120 17" 70h 6d	1120 17" 70h 6d	1120 17" 70h 6d	1186 16" 70h 6d	1186 16" 70h 6d	1262 15" 70h 6d	1262 15" 70h 6d	1350 14" 70h 6d	1350 14" 70h 6d
75' Split	1156 18" 70h 6d	1156 18" 70h 6d	1218 17" 70h 6d	1218 17" 70h 6d	1218 17" 70h 6d	1290 16" 70h 6d	1290 16" 70h 6d	1372 15" 70h 6d	1372 15" 70h 6d	1464 14" 70h 6d	1464 14" 70h 6d
78' Double Split	1280 18" 70h 6d	1280 18" 70h 6d	1346 17" 70h 6d	1346 17" 70h 6d	1424 16" 70h 6d	1424 16" 70h 6d	1424 16" 70h 6d	1520 15" 70h 6d	1614 14" 70h 6d	1614 14" 70h 6d	1732 13" 70h 6d
90' Double Split	1800 17" 80h 6d	1800 17" 80h 6d	1800 17" 80h 6d	1912 16" 80h 6d	1912 16" 80h 6d	2024 15" 80h 6d	2154 14" 80h 6d	2154 14" 80h 6d	2312 13" 80h 6d	2312 13" 80h 6d	2496 12" 80h 6d
105' Double Split	2426 17" 90h 6d	2426 17" 90h 6d	2570 16" 90h 6d	2570 16" 90h 6d	2726 15" 90h 6d	2914 14" 90h 6d	2914 14" 90h 6d	3122 13" 90h 6d	3122 13" 90h 6d	3372 12" 90h 6d	3372 12" 90h 6d

Key:

1	2
3	4

1 = Number of Full SuperWave Supports
3 = Number of Half SuperWave Supports (h)
2 = SuperWave Support Spacing in inches
4 = Number of Double Super Supports (d)

©10/16/2023

Flat Top Super Supports Spacing

FLAT TOP SUPER SUPPORT REQUIREMENTS FOR HEAVY DUTY, 20 GA. PERF. FLOORS

BIN DIA.	# OF RINGS - SUKUP BINS (44" RING HEIGHT) 3	4	5	6	7	8	9	10	11	12	13	CONT. FLOW BOTTOM UNLOAD	RECIRC-ULATOR *
	EAVE HEIGHT (FEET)												
	13'	14' - 16'	17' - 19'	20' - 22'	23' - 26'	27' - 30'	31' - 33'	34' - 37'	38' - 41'	42' - 44'	45' - 48'		
12'	16 35" 4d	18 31" 4d	20 28" 4d	22 25" 0d	20 24" 6d	20 23" 8d	22 21" 6d	22 21" 6d	24 20" 2d	26 19" 4d	26 19" 4d	20 28" 8d	22 15/30" 4d
15'	26 34" 4d	26 30" 8d	28 27" 6d	32 25" 4d	32 23" 8d	34 22" 8d	34 21" 6d	36 20" 8d	38 19" 12d	38 19" 12d	40 18" 12	28 27" 12d	36 15/30" 8d
16' 5" (5M)	30 33" 4d	32 30" 8d	34 27" 8d	36 25" 12d	38 23" 12d	38 22" 12d	40 21" 16d	42 20" 12d	46 19" 12d	48 18" 8d	48 18" 8d	34 27" 12d	44 15/30" 8d
18'	32 33" 10d	34 30" 6d	36 27" 14d	38 25" 14d	46 23" 14d	44 22" 16d	44 21" 14d	46 20" 10d	50 19" 10d	50 18" 14d	56 17" 12d	38 27" 6d	46 15/30" 6d
18' 7"	36 33" 8d	40 29" 8d	46 27" 8d	46 25" 8d	48 23" 12d	50 22" 16d	52 21" 18d	56 20" 12d	56 19" 16d	60 18" 4d	64 17" 8d	46 27" 12d	50 15/30" 8d
19'	34 33" 8d	40 29" 8d	40 27" 10d	46 25" 10d	48 23" 12d	48 22" 14d	52 21" 10d	56 20" 10d	60 19" 16d	60 18" 16d	62 17" 18d	46 27" 14d	52 15/30" 14d
19' 8" (6M)	38 33" 8d	48 29" 4d	52 27" 4d	52 25" 4d	56 23" 12d	56 22" 16d	58 21" 12d	58 20" 16d	62 19" 16d	66 18" 10d	72 17" 8d	52 27" 12d	60 15/30" 4d
21'	46 32" 12d	52 28" 8d	56 26" 14d	58 25" 12d	64 23" 8d	66 21" 8d	68 21" 8d	68 20" 12d	72 19" 4d	72 18" 14d	76 17" 4d	56 26" 18d	66 15/30" 8d
21' 8"	46 32" 14d	46 28" 20d	56 26" 14d	58 25" 12d	58 23" 12d	64 21" 14d	64 21" 14d	66 20" 18d	70 19" 16d	72 18" 18d	80 17" 12d	56 26" 18d	66 15/30" 12d
22' 11" (7M)	58 32" 8d	62 28" 8d	66 26" 6d	68 25" 4d	74 23" 8d	76 21" 12d	78 20" 12d	78 20" 12d	84 19" 12d	88 18" 14d	92 17" 4d	66 26" 12d	76 15/30" 8d
24'	60 32" 8d	64 28" 16d	64 26" 18d	70 25" 8d	76 23" 8d	76 21" 10d	84 20" 12d	84 20" 12d	88 19" 10d	98 17" 18d	98 17" 18d	64 26" 22d	78 15/30" 8d
24' 9"	58 32" 12d	68 28" 6d	68 26" 14d	76 24" 14d	78 23" 10d	86 21" 8d	88 20" 14d	88 20" 14d	90 19" 18d	102 17" 16d	106 17" 16d	68 26" 18d	82 15/30" 12d
26' 3" (8M)	68 32" 14d	76 28" 12d	76 26" 18d	86 24" 8d	92 23" 6d	94 21" 14d	100 20" 10d	108 19" 8d	108 19" 8d	118 17" 14d	124 16" 14d	76 26" 22d	94 15/30" 10d
27'	68 32" 8d	78 28" 12d	82 26" 18d	90 24" 8d	90 23" 12d	100 21" 8d	104 20" 10d	108 19" 12d	108 19" 12d	120 17" 22d	128 16" 24d	82 26" 22d	100 15/30" 4d
27' 10"	76 32" 12d	88 28" 16d	96 25" 8d	100 24" 12d	104 23" 10d	114 21" 4d	120 20" 0d	126 19" 4d	126 19" 4d	132 17" 12d	142 16" 10d	96 25" 12d	110 15/30" 12d
29' 6" (9M)	82 32" 16d	92 28" 18d	108 25" 16d	108 24" 18d	110 22" 16d	118 21" 16d	126 20" 6d	130 19" 16d	138 18" 18d	144 17" 14d	156 16" 12d	108 25" 20d	122 15/30" 20d
30'	90 32" 4d	106 28" 12d	114 25" 8d	116 24" 16d	124 22" 12d	132 21" 12d	132 20" 8d	142 19" 20d	148 18" 12d	156 17" 16d	164 16" 8d	114 25" 12d	132 15/30" 4d
31'	108 30" 8d	110 27" 12d	124 24" 12d	126 23" 20d	132 22" 4d	138 21" 16d	142 20" 6d	150 19" 16d	154 18" 12d	168 17" 12d	172 16" 10d	124 24" 16d	142 15/30" 8d
33'	108 30" 18d	124 27" 12d	132 24" 14d	138 23" 14d	142 22" 14d	148 21" 8d	152 20" 14d	162 19" 26d	168 18" 18d	192 16" 18d	202 15" 22d	132 24" 18d	144 15/30" 18d
34'	122 29" 16d	128 26" 20d	144 24" 6d	146 23" 6d	154 21" 8d	154 21" 8d	168 20" 6d	170 19" 24d	182 18" 22d	204 16" 14d	214 15" 24d	144 24" 10d	150 15/30" 14d
36'	140 29" 12d	156 26" 8d	170 24" 8d	182 22" 4d	184 21" 10d	198 20" 12d	198 20" 12d	202 19" 10d	222 17" 16d	232 16" 30d	250 15" 24d	170 24" 12d	176 15/30" 12d
36' 1" (11M)	142 29" 12d	156 26" 8d	170 24" 8d	182 22" 8d	190 21" 10d	198 20" 12d	198 20" 12d	198 19" 14d	222 17" 20d	232 16" 22d	258 15" 12d	--- --- --- ---	--- --- --- ---
37' 1"	146 29" 20d	164 26" 12d	176 24" 10d	194 22" 8d	194 21" 8d	200 20" 24d	200 20" 24d	210 19" 16d	244 17" 8d	246 16" 12d	266 15" 16d	--- --- --- ---	--- --- --- ---
42' Split	192 28" 62d	200 26" 74d	220 24" 78d	232 22" 74d	242 21" 80d	250 20" 82d	266 19" 82d	266 19" 82d	296 17" 82d	314 16" 72d	330 15" 86d	--- --- --- ---	--- --- --- ---
42' 8" (13M) Split	196 28" 80d	212 26" 72d	226 24" 64d	248 22" 68d	256 21" 80d	270 20" 76d	276 19" 80d	294 18" 76d	302 17" 80d	326 16" 68d	348 15" 88d	--- --- --- ---	--- --- --- ---
43' 3" Split	202 28" 82d	214 26" 78d	226 24" 76d	248 22" U_U	256 21" 90d	270 20" 94d	276 19" 76d	294 18" 74d	302 17" 78d	326 16" 78d	348 15" 82d	--- --- --- ---	--- --- --- ---
48' Split	244 28" 78d	262 25" 84d	282 23" 86d	292 22" 94d	326 20" 84d	342 19" 82d	342 19" 82d	356 18" 84d	378 17" 86d	396 16" 88d	426 15" 96d	--- --- --- ---	--- --- --- ---
49' 3" (15M) Split	250 28" 96d	278 25" 86d	300 23" 94d	308 22" 98d	338 20" 84d	354 19" 94d	354 19" 94d	374 18" 98d	402 17" 98d	420 16" 96d	444 15" 96d	--- --- --- ---	--- --- --- ---
54' Split	310 27" 94d	330 25" 100d	358 23" 96d	388 21" 102d	406 20" 96d	428 19" 104d	448 18" 98d	448 18" 98d	472 17" 108d	534 15" 114d	576 14" 120d	--- --- --- ---	--- --- --- ---
55' 8" Split	334 27" 104d	360 25" 104d	386 23" 104d	416 21" 88d	440 20" 100d	458 19" 100d	488 18" 100d	518 17" 104d	518 17" 104d	580 15" 124d	626 14" 100d	--- --- --- ---	--- --- --- ---
59' 1" (18M) Split	412 25" 102d	450 23" 94d	480 21" 102d	494 20" 110d	530 19" 98d	558 18" 98d	558 18" 98d	592 17" 106d	622 16" 90d	702 14" 110d	702 14" 110d	--- --- --- ---	--- --- --- ---
60' Split	418 25" 104d	452 23" 106d	496 21" 108d	496 20" 108d	520 19" 102d	552 18" 110d	588 17" 106d	588 17" 106d	656 15" 120d	698 14" 118d	698 14" 118d	--- --- --- ---	--- --- --- ---
61' 10" Split	452 25" 108d	486 23" 114d	532 21" 116d	556 20" 100d	586 19" 104d	606 18" 104d	640 17" 116d	640 17" 116d	724 15" 112d	772 14" 120d	828 13" 112d	--- --- --- ---	--- --- --- ---
72' Split	626 24" 110d	670 22" 122d	706 21" 118d	738 20" 110d	784 19" 122d	816 18" 114d	870 17" 134d	918 16" 122d	972 15" 126d	1044 14" 134d	1122 13" 134d	--- --- --- ---	--- --- --- ---
75' Split	654 24" 136d	712 22" 142d	746 21" 134d	780 20" 142d	812 19" 142d	868 18" 130d	918 17" 128d	966 16" 144d	1034 15" 136d	1102 14" 142d	1188 13" 146d	--- --- --- ---	--- --- --- ---
78' Double Split	764 23" 168d	786 22" 160d	874 20" 160d	916 19" 156d	958 18" 176d	958 18" 176d	1020 17" 156d	1080 16" 164d	1150 15" 184d	1216 14" 178d	1318 13" 168d	--- --- --- ---	--- --- --- ---
90' Double Split	1060 21" 226d	1118 20" 214d	1182 19" 224d	1234 18" 224d	1318 17" 222d	1318 17" 222d	1484 15" 252d	1588 14" 236d	1588 14" 236d	1704 13" 246d	1846 12" 226d	--- --- --- ---	--- --- --- ---
105' Double Split	1538 20" 168d	1636 19" 184d	1636 19" 184d	1722 18" 176d	1820 17" 164d	1914 16" 168d	2050 15" 168d	2176 14" 190d	2344 13" 190d	2528 12" 178d	2528 12" 178d	--- --- --- ---	--- --- --- ---

©5/21/20

Flat Top Super Supports Spacing

FLAT TOP SUPER SUPPORT REQUIREMENTS FOR HEAVY DUTY, 20 GA. PERF. FLOORS

OF RINGS - SUKUP BINS (44" RING HEIGHT)

BIN DIA.	14	15	16	17	18	19	20	21	22	CONT. FLOW BOTTOM UNLOAD	RECIRC-ULATOR *
	EAVE HEIGHT (FEET)										
	49' - 52'	53' - 56'	57' - 59'	60' - 63'	64' - 66'	67' - 70'	71' - 74'	75' - 78'	79' - 81'		
12'	26 17" 10d	26 17" 10d	28 16" 12d	30 15" 10d	34 14" 10d	34 13" 6d	34 13" 6d	38 12" 2d	38 12" 2d	20 28" 8d	22 15/30" 4d
15'	44 17" 12d	46 16" 4d	46 15" 8d	50 14" 4d	56 13" 8d	56 13" 8d	56 13" 8d	56 12" 8d	56 12" 8d	28 27" 12d	36 15/30" 8d
16' 5" (5M)	54 16" 8d	56 15" 12d	56 15" 12d	58 14" 16d	64 13" 12d	64 13" 12d	64 13" 12d	66 12" 6d	66 12" 6d	34 27" 12d	44 15/30" 8d
18'	60 16" 12d	62 15" 18d	64 14" 18d	64 14" 18d	70 13" 14d	76 12" 10d	76 12" 10d	76 12" 10d	76 12" 10d	38 27" 6d	46 15/30" 6d
18' 7"	64 16" 4d	72 15" 12d	72 14" 4d	72 14" 4d	82 13" 4d	88 12" 10d	88 12" 10d	88 12" 10d	94 11" 18d	46 27" 12d	50 15/30" 8d
19'	64 16" 10d	70 15" 10d	74 14" 16d	74 14" 16d	82 13" 4d	90 12" 4d	90 12" 4d	90 12" 4d	96 11" 14d	46 27" 14d	52 15/30" 14d
19' 8" (6M)	74 16" 8d	76 15" 12d	84 14" 12d	84 14" 12d	88 13" 14d	98 12" 8d	98 12" 8d	98 12" 8d	104 11" 16d	52 27" 12d	60 15/30" 4d
21'	80 16" 18d	84 15" 16d	92 14" 10d	92 14" 10d	96 13" 8d	108 12" 8d	108 12" 8d	--- --- --- ---	--- --- --- ---	56 26" 18d	66 15/30" 8d
21' 8"	82 16" 18d	88 15" 22d	94 14" 18d	100 13" 24d	100 13" 24d	110 12" 14d	110 12" 14d	--- --- --- ---	--- --- --- ---	56 26" 18d	66 15/30" 12d
22' 11" (7M)	100 16" 4d	104 15" 28d	116 14" 8d	122 13" 8d	122 13" 8d	128 12" 4d	128 12" 4d	--- --- --- ---	--- --- --- ---	66 26" 12d	76 15/30" 8d
24'	108 15" 18d	108 15" 18d	118 14" 6d	126 13" 20d	126 13" 20d	136 12" 10d	136 12" 10d	--- --- --- ---	--- --- --- ---	64 26" 22d	78 15/30" 8d
24' 9"	116 15" 12d	122 14" 14d	122 14" 14d	132 13" 20d	132 13" 20d	144 12" 24d	154 11" 18d	--- --- --- ---	--- --- --- ---	68 26" 18d	82 15/30" 12d
26' 3" (8M)	132 15" 14d	138 14" 18d	138 14" 18d	152 13" 8d	164 12" 10d	164 12" 10d	180 11" 16d	--- --- --- ---	--- --- --- ---	76 26" 22d	94 15/30" 10d
27'	138 15" 14d	150 14" 6d	150 14" 6d	156 13" 14d	170 12" 22d	170 12" 22d	186 11" 12d	--- --- --- ---	--- --- --- ---	82 26" 22d	100 15/30" 4d
27' 10"	150 15" 16d	158 14" 28d	158 14" 28d	170 13" 16d	184 12" 16d	184 12" 16d	204 11" 20d	--- --- --- ---	--- --- --- ---	96 25" 12d	110 15/30" 12d
29' 6" (9M)	164 15" 12d	180 14" 14d	180 14" 14d	190 13" 16d	206 12" 10d	226 11" 12d	226 11" 12d	--- --- --- ---	--- --- --- ---	108 25" 20d	122 15/30" 20d
30'	174 15" 12d	186 14" 20d	186 14" 20d	204 13" 16d	216 12" 16d	236 11" 20d	236 11" 20d	--- --- --- ---	--- --- --- ---	114 25" 12d	132 15/30" 4d
31'	182 15" 8d	196 14" 20d	214 13" 20d	228 12" 16d	228 12" 16d	--- --- --- ---	--- --- --- ---	--- --- --- ---	--- --- --- ---	124 24" 16d	142 15/30" 8d
33'	222 14" 14d	222 14" 14d	238 13" 26d	256 12" 16d	256 12" 16d	--- --- --- ---	--- --- --- ---	--- --- --- ---	--- --- --- ---	132 24" 18d	144 15/30" 18d
34'	232 14" 14d	232 14" 14d	248 13" 16d	268 12" 12d	268 12" 12d	--- --- --- ---	--- --- --- ---	--- --- --- ---	--- --- --- ---	144 24" 10d	150 15/30" 14d
36'	268 14" 8d	286 13" 12d	286 13" 12d	310 12" 16d	336 11" 34d	--- --- --- ---	--- --- --- ---	--- --- --- ---	--- --- --- ---	170 24" 12d	176 15/30" 12d
36' 1" (11M)	264 14" 20d	286 13" 12d	286 13" 12d	312 12" 0d	336 11" 30d	--- --- --- ---	--- --- --- ---	--- --- --- ---	--- --- --- ---	--- --- --- ---	--- --- --- ---
37' 1"	282 14" 24d	302 13" 16d	302 13" 16d	332 12" 20d	356 11" 24d	--- --- --- ---	--- --- --- ---	--- --- --- ---	--- --- --- ---	--- --- --- ---	--- --- --- ---
42' Split	358 14" 82d	388 13" 78d	388 13" 78d	416 12" 8d	454 11" 26d	--- --- --- ---	--- --- --- ---	--- --- --- ---	--- --- --- ---	--- --- --- ---	--- --- --- ---
42' 8" (13M) Split	372 14" 88d	402 13" 72d	402 13" 72d	430 12" 78d	470 11" 20d	--- --- --- ---	--- --- --- ---	--- --- --- ---	--- --- --- ---	--- --- --- ---	--- --- --- ---
43' 3" Split	372 14" 88d	398 13" 88d	436 12" 86d	436 12" 86d	474 11" 20d	--- --- --- ---	--- --- --- ---	--- --- --- ---	--- --- --- ---	--- --- --- ---	--- --- --- ---
48' Split	454 14" 86d	494 13" 100d	530 12" 100d	576 11" 24d	576 11" 24d	--- --- --- ---	--- --- --- ---	--- --- --- ---	--- --- --- ---	--- --- --- ---	--- --- --- ---
49' 3" (15M) Split	480 14" 100d	514 13" 98d	562 12" 86d	610 11" 26d	610 11" 26d	--- --- --- ---	--- --- --- ---	--- --- --- ---	--- --- --- ---	--- --- --- ---	--- --- --- ---
54' Split	620 13" 98d	620 13" 98d	670 12" 102d	734 11" 18d	734 11" 18d	--- --- --- ---	--- --- --- ---	--- --- --- ---	--- --- --- ---	--- --- --- ---	--- --- --- ---
55' 8" Split	664 13" 100d	664 13" 100d	724 12" 16d	790 11" 34d	790 11" 34d	--- --- --- ---	--- --- --- ---	--- --- --- ---	--- --- --- ---	--- --- --- ---	--- --- --- ---
59' 1" (18M) Split	754 13" 114d	824 12" 114d	886 11" 44d	--- --- --- ---	--- --- --- ---	--- --- --- ---	--- --- --- ---	--- --- --- ---	--- --- --- ---	--- --- --- ---	--- --- --- ---
60' Split	756 13" 120d	826 12" 118d	902 11" 36d	--- --- --- ---	--- --- --- ---	--- --- --- ---	--- --- --- ---	--- --- --- ---	--- --- --- ---	--- --- --- ---	--- --- --- ---
61' 10" Split	828 13" 112d	896 12" 12d	976 11" 40d	--- --- --- ---	--- --- --- ---	--- --- --- ---	--- --- --- ---	--- --- --- ---	--- --- --- ---	--- --- --- ---	--- --- --- ---
72' Split	1200 12" 20d	1200 12" 20d	1318 11" 44d	--- --- --- ---	--- --- --- ---	--- --- --- ---	--- --- --- ---	--- --- --- ---	--- --- --- ---	--- --- --- ---	--- --- --- ---
75' Split	1280 12" 142d	1280 12" 142d	1404 11" 38d	--- --- --- ---	--- --- --- ---	--- --- --- ---	--- --- --- ---	--- --- --- ---	--- --- --- ---	--- --- --- ---	--- --- --- ---
78' Double Split	1420 12" 164d	1540 11" 40d	1540 11" 40d	--- --- --- ---	--- --- --- ---	--- --- --- ---	--- --- --- ---	--- --- --- ---	--- --- --- ---	--- --- --- ---	--- --- --- ---
90' Double Split	2022 11" 32d	--- --- --- ---	--- --- --- ---	--- --- --- ---	--- --- --- ---	--- --- --- ---	--- --- --- ---	--- --- --- ---	--- --- --- ---	--- --- --- ---	--- --- --- ---
105' Double Split	2770 11" 52d	--- --- --- ---	--- --- --- ---	--- --- --- ---	--- --- --- ---	--- --- --- ---	--- --- --- ---	--- --- --- ---	--- --- --- ---	--- --- --- ---	--- --- --- ---

©5/21/20

Z-Post Supports Spacing

Z-POST SUPPORT & SPACING FOR HAWK CUT FLOORS

TOTAL NUMBER OF Z-POST SUPPORTS/SPACING*

	20 GA. Z-POST REQUIREMENTS										18 GA. Z-POST REQUIREMENTS												Cont. Flow Bottom Unload **		Recirc-ulator ***	
	# OF RINGS - SUKUP BINS (44" RING HEIGHT)										# OF RINGS - SUKUP BINS (44" RING HEIGHT)															
	3 & 4		5		6		7		8		9		10		11		12		13		14		15		16					
BIN	EAVE HEIGHT (FEET)												EAVE HEIGHT (FEET)																	
DIAMETER	16'		17' - 19'		20' - 22'		23' - 26'		27' - 30'		31' - 33'		34' - 37'		38' - 41'		42' - 44'		45' - 48'		49' - 52'		53' - 56'		57' - 59'					
12'	59	54"	59	54"	63	50"	69	46"	75	41"	80	37"	78	38"	84	35"	86	32"	90	30"	94	28"	98	26"	104	25"	86	32"	112	24"
15'	85	54"	85	54"	88	50"	94	46"	100	41"	110	37"	108	38"	116	35"	120	32"	130	30"	134	28"	143	26"	149	25"	126	32"	159	24"
16' 5" (5M)	96	54"	96	54"	106	50"	110	46"	117	41"	125	37"	123	38"	133	35"	142	32"	148	30"	156	28"	164	26"	172	25"	153	32"	195	24"
18'	120	54"	120	54"	126	49"	133	45"	145	40"	156	36"	154	37"	164	34"	174	32"	188	29"	196	27"	206	26"	223	24"	184	32"	230	24"
18' 7"	136	54"	136	54"	146	49"	156	45"	168	40"	182	36"	178	37"	189	34"	203	32"	216	29"	228	27"	234	26"	248	24"	193	32"	245	24"
19'	136	54"	136	54"	146	49"	156	45"	168	40"	182	36"	178	37"	189	34"	203	32"	216	29"	228	27"	234	26"	248	24"	198	32"	258	24"
19' 8" (6M)	142	54"	146	53"	158	49"	168	44"	184	40"	195	36"	192	37"	205	34"	222	31"	234	29"	248	27"	254	26"	274	24"	215	32"	276	24"
21'	158	54"	160	53"	170	49"	186	44"	198	40"	215	36"	211	37"	223	34"	242	31"	254	29"	272	27"	280	26"	300	24"	238	32"	305	24"
21' 8"	175	54"	179	53"	187	49"	206	44"	218	40"	238	36"	234	37"	250	34"	266	31"	283	29"	298	27"	310	26"	336	24"	252	32"	328	24"
22' 11" (7M)	187	54"	191	53"	200	49"	218	44"	238	40"	258	36"	252	37"	272	34"	291	31"	305	29"	324	27"	332	26"	360	24"	290	32"	368	24"
24'	199	54"	214	50"	220	48"	230	44"	258	39"	288	35"	278	36"	290	34"	311	31"	334	29"	352	27"	374	25"	392	24"	308	32"	394	24"
24' 9"	216	54"	236	50"	240	48"	257	44"	282	39"	306	35"	300	36"	318	34"	338	31"	362	29"	387	27"	408	25"	424	24"	326	32"	422	24"
26' 3" (8M)	252	50"	252	50"	254	48"	281	43"	310	38"	334	35"	322	36"	346	33"	366	31"	387	29"	411	27"	440	25"	454	24"	370	32"	482	24"
27'	262	50"	262	50"	273	48"	295	43"	324	38"	356	35"	346	36"	374	33"	390	31"	411	29"	440	27"	474	25"	490	24"	383	32"	497	24"
27' 10"	288	50"	288	50"	298	48"	322	43"	355	38"	376	35"	371	36"	402	33"	426	31"	446	29"	478	27"	509	25"	532	24"	417	32"	532	24"
29' 6" (9M)	320	50"	320	50"	360	44"	367	42"	401	38"	438	34"	424	36"	458	33"	496	30"	531	28"	564	26"	584	25"	604	24"	466	32"	602	24"
30'	320	50"	320	50"	360	44"	367	42"	401	38"	438	34"	424	36"	458	33"	496	30"	531	28"	564	26"	584	25"	604	24"	468	32"	612	24"
31'	341	50"	341	50"	378	44"	398	42"	434	38"	477	34"	452	36"	491	33"	530	30"	562	28"	604	26"	625	25"	647	24"	506	32"	662	24"
33'	378	50"	378	50"	424	44"	466	40"	506	37"	546	34"	530	35"	582	32"	612	30"	652	28"	708	26"	734	25"	798	23"	559	32"	733	24"
34'	416	50"	416	50"	459	44"	498	40"	536	37"	574	34"	558	35"	607	32"	637	30"	674	28"	726	26"	752	25"	810	23"	612	32"	798	24"
36'	455	50"	455	50"	508	44"	552	40"	588	37"	657	33"	620	35"	669	32"	712	30"	756	28"	806	26"	870	24"	910	23"	662	32"	878	24"
36' 1" (11M)	455	50"	455	50"	508	44"	552	40"	588	37"	657	33"	620	35"	669	32"	712	30"	756	28"	806	26"	870	24"	910	23"	676	32"	893	24"
37' 1"	493	50"	493	50"	544	44"	592	40"	634	37"	697	33"	661	35"	716	32"	764	30"	812	28"	869	26"	924	24"	964	23"	722	32"	938	24"
42' Split	670	50"	738	44"	738	44"	801	40"	878	36"	968	32"	968	32"	992	31"	1051	29"	1118	27"	1156	26"	1237	24"	1290	23"				
42'8"(13M) Split	712	50"	790	44"	790	44"	855	40"	930	36"	1030	32"	1030	32"	1051	31"	1114	29"	1190	27"	1226	26"	1311	24"	1364	23"				
43' 3" Split	712	50"	790	44"	790	44"	855	40"	930	36"	1030	32"	1030	32"	1051	31"	1114	29"	1190	27"	1226	26"	1311	24"	1364	23"				
48' Split	848	50"	955	44"	967	43"	1128	36"	1152	35"	1248	32"	1248	32"	1278	31"	1358	29"	1443	27"										
49'3"(15M) Split	904	50"	1003	44"	1020	43"	1186	36"	1217	35"	1310	32"	1310	32"	1352	31"	1426	29"	1522	27"										
54' Split	1184	44"	1184	44"	1288	40"	1406	36"	1564	32"	1649	30"	1564	32"	1649	30"														
55' 8" Split	1291	44"	1291	44"	1398	40"	1523	36"	1692	32"	1792	30"	1692	32"	1792	30"														
59'1"(18M) Split	1412	44"	1412	44"	1528	40"	1674	36"	1866	32"	1965	30"	1866	32"	2030	29"														
60' Split	1450	44"	1450	44"	1578	40"	1728	36"	1914	32"	2032	30"	1914	32"	2094	29"														
61' 10" Split	1574	44"	1574	44"	1700	40"	1864	36"	2075	32"	2194	30"	2075	32"	2258	29"														
72' Split	2226	40"	2456	36"	2735	32"	3083	28"	3083	28"	3083	28"	3083	28"	3194	27"														
75' Split	2412	40"	2657	36"	2960	32"	3340	28"	3340	28"	3340	28"	3340	28"	3457	27"														
78' Double Split	2936	36"	2936	36"	3264	32"	3680	28"	3680	28"	3680	28"	3680	28"	3802	27"														

*Example: 59 54" indicates a total of 59 supports at 54" spacing on each plank.

**Continuous-flow Bottom Unload: Use 20 ga. supports. Additional supports are required around center sump. Maximum grain depth is 20'.

***For Recirculation devices: Use 20 ga. supports with Hawk Cut flooring. Additional supports are placed around center sump. Maximum grain depth is 20'. Stirring machines are not recirculators. Therefore, support spacing is based on eave height.

©3/12/19

SuperWave Supports Spacing

Sukup

SUPERWAVE™ SUPPORT REQUIREMENTS FOR HAWK CUT FLOORS

BIN DIA.	# OF RINGS - SUKUP BINS (44" RING HEIGHT)												
	3 & 4	5	6	7	8	9	10	11	12	13	14	15	16
	EAVE HEIGHT (FEET)												
	16'	17' 19'	20' - 22'	23' - 26'	27' - 30'	31' - 33'	34' - 37'	38' - 41'	42' - 44'	45' - 48'	49' - 52'	53' - 56'	57' - 59'
12'	19 33" 20h	19 31" 20h	19 32" 20h	19 30" 20h	20 28" 20h	22 26" 20h	24 25" 20h	26 20" 20h	28 19" 20h	28 19" 20h	30 18" 20h	30 17" 20h	30 17" 20h
15'	28 32" 20h	28 30" 20h	30 28" 20h	30 27" 20h	30 27" 20h	30 26" 20h	32 25" 20h	38 20" 20h	40 19" 30h	40 19" 30h	42 18" 30h	44 17" 30h	44 17" 30h
16' 5" (5M)	30 32" 20h	30 29" 20h	32 28" 20h	32 27" 20h	32 27" 20h	36 26" 20h	38 25" 20h	42 20" 30h	46 19" 30h	46 18" 30h	46 18" 30h	51 17" 30h	51 17" 30h
18'	36 31" 20h	40 29" 20h	42 27" 20h	42 26" 20h	42 26" 20h	42 26" 20h	44 25" 20h	54 20" 30h	57 19" 30h	63 18" 30h	63 18" 30h	65 17" 30h	65 17" 30h
18' 7"	42 31" 20h	48 28" 20h	48 27" 20h	48 26" 20h	48 26" 20h	48 26" 20h	50 25" 30h	63 20" 30h	65 19" 30h	69 18" 30h	69 18" 30h	71 17" 40h	71 17" 40h
19'	42 31" 20h	48 28" 20h	48 27" 20h	48 26" 20h	48 26" 20h	48 26" 20h	50 25" 30h	63 20" 30h	65 19" 30h	69 18" 30h	69 18" 30h	71 17" 40h	71 17" 40h
19' 8" (6M)	46 31" 20h	48 28" 20h	52 26" 30h	54 25" 30h	56 24" 30h	56 24" 30h	56 24" 30h	67 20" 30h	69 19" 30h	73 18" 40h	73 18" 40h	79 17" 40h	79 17" 40h
21'	50 31" 20h	54 28" 20h	60 26" 30h	62 25" 30h	62 24" 30h	62 24" 30h	62 24" 30h	77 20" 30h	81 19" 40h	83 18" 40h	83 18" 40h	85 17" 40h	85 17" 40h
21' 8"	56 31" 20h	62 28" 30h	64 26" 30h	64 25" 30h	66 24" 30h	73 23" 30h	73 23" 30h	81 20" 40h	85 19" 40h	91 18" 40h	91 18" 40h	95 17" 40h	95 17" 40h
22' 11" (7M)	60 30" 30h	64 27" 30h	70 25" 30h	75 24" 30h	79 23" 30h	79 22" 30h	79 22" 30h	91 19" 40h	91 19" 40h	99 17" 40h	99 17" 40h	106 16" 40h	106 16" 40h
24'	66 30" 30h	72 27" 30h	81 25" 30h	83 24" 30h	83 23" 30h	89 22" 30h	93 21" 40h	99 19" 40h	105 18" 40h	111 17" 40h	111 17" 40h	118 16" 40h	118 16" 40h
24' 9"	72 30" 30h	77 27" 30h	85 25" 30h	87 24" 30h	89 23" 30h	97 22" 40h	99 21" 40h	109 19" 40h	113 18" 40h	120 17" 40h	120 17" 40h	128 16" 40h	128 16" 40h
26' 3" (8M)	74 29" 30h	85 27" 30h	91 25" 30h	97 23" 40h	99 22" 40h	105 21" 40h	105 21" 40h	115 19" 40h	120 18" 40h	130 17" 40h	130 17" 40h	134 16" 50h	134 16" 50h
27'	85 29" 30h	93 27" 30h	95 25" 30h	107 23" 40h	111 22" 40h	113 21" 40h	113 21" 40h	125 19" 40h	134 18" 40h	138 17" 40h	138 17" 40h	152 16" 50h	152 16" 50h
27' 10"	91 29" 30h	95 27" 30h	105 25" 40h	113 23" 40h	117 22" 40h	123 21" 40h	129 20" 40h	136 19" 40h	138 18" 40h	152 17" 50h	152 17" 50h	158 16" 50h	158 16" 50h
29' 6" (9M)	105 29" 30h	111 27" 40h	121 25" 40h	129 23" 40h	135 22" 40h	136 21" 40h	148 20" 40h	154 19" 40h	164 18" 50h	172 17" 50h	172 17" 50h	182 16" 50h	182 16" 50h
30'	107 28" 30h	115 26" 40h	125 24" 40h	129 23" 40h	136 21" 40h	148 20" 40h	148 20" 40h	154 19" 40h	164 18" 50h	172 17" 50h	182 16" 50h	194 15" 60h	194 15" 60h
31'	111 28" 40h	123 26" 40h	131 24" 40h	135 23" 40h	150 21" 40h	156 20" 40h	162 19" 50h	162 19" 50h	176 18" 50h	182 17" 50h	192 16" 60h	202 15" 60h	202 15" 60h
33'	129 28" 40h	137 26" 40h	147 24" 40h	160 22" 40h	166 21" 40h	176 20" 50h	184 19" 50h	198 18" 50h	198 18" 50h	220 16" 60h	220 16" 60h	231 15" 60h	231 15" 60h
34'	137 28" 40h	149 26" 40h	155 24" 40h	172 22" 40h	180 21" 50h	188 20" 50h	202 19" 50h	208 18" 50h	208 18" 50h	231 16" 60h	231 16" 60h	249 15" 60h	249 15" 60h
36'	155 28" 40h	172 25" 40h	176 24" 40h	194 22" 50h	202 21" 50h	210 20" 50h	222 19" 50h	234 18" 60h	234 18" 60h	259 16" 60h	259 16" 60h	281 15" 60h	281 15" 60h
36' 1" (11M)	155 28" 40h	172 25" 40h	176 24" 40h	194 22" 50h	202 21" 50h	210 20" 50h	222 19" 50h	234 18" 60h	234 18" 60h	259 16" 60h	259 16" 60h	281 15" 60h	281 15" 60h
37' 1"	167 27" 40h	178 25" 40h	192 23" 50h	202 22" 50h	210 21" 50h	224 20" 50h	232 19" 60h	246 18" 60h	259 17" 60h	279 16" 60h	279 16" 60h	291 15" 70h	291 15" 70h
42' Split	249 26" 50h	271 24" 50h	281 23" 50h	301 21" 60h	310 20" 60h	330 19" 60h	330 19" 60h	346 18" 60h	364 17" 70h	385 16" 70h	407 15" 80h	407 15" 80h	435 14" 80h
42' 8" (13M) Split	264 26" 50h	276 24" 50h	290 23" 50h	314 21" 60h	329 20" 60h	339 19" 60h	339 19" 60h	361 18" 60h	379 17" 70h	402 16" 70h	422 15" 80h	422 15" 80h	452 14" 80h
43' 3" Split	265 26" 50h	277 24" 50h	291 23" 50h	315 21" 60h	330 20" 60h	340 19" 60h	362 18" 60h	362 18" 60h	380 17" 70h	403 16" 70h	423 15" 80h	423 15" 80h	453 14" 80h
48' Split	335 26" 50h	354 24" 60h	381 22" 60h	396 21" 60h	416 20" 60h	435 19" 70h	458 18" 70h	458 18" 70h	483 17" 80h	541 15" 80h	541 15" 80h	577 14" 90h	577 14" 90h
49' 3" (15M) Split	343 26" 50h	370 24" 60h	393 22" 60h	416 21" 60h	433 20" 70h	453 19" 70h	472 18" 70h	472 18" 70h	501 17" 80h	559 15" 80h	559 15" 80h	600 14" 90h	600 14" 90h
54' Split	438 24" 60h	476 22" 70h	496 21" 70h	521 20" 70h	546 19" 80h	573 18" 80h	606 17" 80h	636 16" 90h	636 16" 90h	673 15" 90h	673 15" 90h	721 14" 100h	721 14" 100h
55' 8" Split	475 24" 60h	506 22" 70h	533 21" 70h	554 20" 80h	583 19" 80h	616 18" 80h	644 17" 90h	681 16" 90h	681 16" 90h	722 15" 100h	722 15" 100h	776 14" 100h	776 14" 100h
59' 1" (18M) Split	537 23" 70h	566 22" 70h	620 20" 80h	639 19" 80h	679 18" 90h	679 18" 90h	714 17" 90h	757 16" 100h	757 16" 100h	802 15" 100h	802 15" 100h	858 14" 110h	858 14" 110h
60' Split	559 23" 70h	579 22" 70h	635 20" 80h	662 19" 80h	702 18" 90h	702 18" 90h	731 17" 90h	776 16" 100h	776 16" 100h	826 15" 100h	826 15" 100h	882 14" 110h	882 14" 110h
61' 10" Split	596 23" 70h	623 22" 80h	670 20" 80h	707 19" 80h	744 18" 90h	744 18" 90h	785 17" 100h	826 16" 100h	826 16" 100h	884 15" 110h	884 15" 110h	941 14" 110h	941 14" 110h
72' Split	814 22" 90h	895 20" 90h	935 19" 100h	990 18" 100h	1041 17" 110h	1041 17" 110h	1099 16" 120h	1176 15" 120h	1176 15" 120h	1250 14" 130h	1250 14" 130h	1250 14" 130h	1344 13" 140h
75' Split	924 21" 90h	969 20" 100h	1015 19" 100h	1070 18" 110h	1129 17" 110h	1193 16" 120h	1193 16" 120h	1268 15" 130h	1268 15" 130h	1356 14" 140h	1356 14" 140h	1454 13" 140h	1454 13" 140h
78' Double Split	1004 21" 100h	1043 20" 100h	1096 19" 100h	1158 18" 110h	1217 17" 120h	1294 16" 120h	1294 16" 120h	1378 15" 130h	1378 15" 130h	1472 14" 140h	1472 14" 140h	1579 13" 150h	1579 13" 150h

Key: 1 2 / 3

1 = Number of SuperWave Supports
2 = SuperWave Support Spacing in inches
3 = Number of Half SuperWave Supports (h)

©11/8/2022

13-17 315-923-9118 or anmartinsystems.co 13-17

Super Supports Spacing

Sukup

SUPER SUPPORT REQUIREMENTS FOR HAWK CUT FLOOR

BIN DIAMETER	# OF RINGS - SUKUP BINS (44" RING HEIGHT)													CONTINUOUS FLOW BOTTOM UNLOAD	RECIRCULATOR
	3 & 4	5	6	7	8	9	10	11	12	13	14	15	16		
	EAVE HEIGHT (FEET)														
	16'	17' - 19'	20' - 22'	23' - 26'	27' - 30'	31' - 33'	34' - 37'	38' - 41'	42' - 44'	45' - 48'	49' - 52'	53' - 56'	57' - 59'		
12'	16 30" 12z	16 30" 12z	16 30" 12z	18 26" 8z	20 22" 12z	20 22" 12z	26 18" 6z 8d	26 17" 6z 8d	26 16" 12z 8d	34 14" 14z 8d	34 14" 14z 8d	34 14" 14z 8d	34 14" 14z 8d	18 26" 8z 4d	24 11/22" 12z 8d
15'	26 30" 10z	26 30" 10z	26 30" 10z	28 26" 12z	34 22" 6z	34 22" 6z	40 18" 12z 10d	48 17" 8z 10d	48 16" 8z 10d	50 14" 8z 10d	50 14" 8z 10d	50 14" 8z 10d	50 14" 8z 10d	28 26" 12z 4d	44 11/22" 16z 10d
16' 5" (5M)	26 30" 22z	26 30" 22z	26 30" 22z	32 26" 12z	36 22" 14z	36 22" 14z	44 18" 14z 10d	52 17" 8z 10d	58 16" 4z 10d	58 14" 8z 10d	58 14" 8z 10d	58 14" 8z 10d	58 14" 8z 10d	32 26" 12z 4d	48 11/22" 14z 10d
18'	34 30" 14z	34 30" 14z	34 30" 14z	36 26" 16z	44 22" 20z	44 22" 20z	52 18" 20z 10d	58 17" 10z 10d	62 16" 10z 10d	66 14" 18z 10d	66 14" 18z 10d	66 14" 18z 10d	66 14" 18z 10d	36 26" 16z 4d	56 11/22" 20z 10d
18' 7"	34 30" 16z	34 30" 16z	34 30" 16z	41 26" 18z	50 22" 18z	50 22" 18z	60 18" 14z 12d	64 17" 12z 12d	66 16" 14z 12d	74 14" 4z 12d	74 14" 4z 12d	74 14" 4z 12d	74 14" 4z 12d	44 26" 18z 4d	64 11/22" 18z 12d
19'	34 30" 22z	34 30" 22z	34 30" 22z	44 26" 18z	48 22" 20z	48 22" 20z	62 18" 18z 12d	64 17" 18z 12d	66 16" 18z 12d	76 14" 18z 12d	76 14" 18z 12d	76 14" 18z 12d	76 14" 18z 12d	44 26" 18z 4d	62 11/22" 20z 12d
19' 8" (6M)	42 30" 14z	42 30" 14z	42 30" 14z	46 26" 20z	54 22" 24z	54 22" 24z	68 18" 8z 12d	68 17" 22z 12d	72 16" 14z 12d	84 14" 12z 12d	84 14" 12z 12d	84 14" 12z 12d	84 14" 12z 12d	46 26" 20z 4d	68 11/22" 24z 12d
21'	46 30" 18z	46 30" 18z	46 30" 18z	54 26" 20z	58 22" 20z	58 22" 20z	74 18" 12z 12d	76 17" 8z 12d	80 16" 14z 12d	94 14" 8z 12d	94 14" 8z 12d	94 14" 8z 12d	94 14" 8z 12d	54 26" 20z 4d	74 11/22" 20z 12d
21' 8"	48 30" 18z	48 30" 18z	48 30" 18z	56 26" 12z	64 22" 14z	64 22" 14z	76 18" 16z 14d	82 17" 10z 14d	84 16" 18z 14d	100 14" 12z 14d	100 14" 12z 14d	100 14" 12z 14d	100 14" 12z 14d	56 26" 12z 4d	80 11/22" 16z 14d
22' 11" (7M)	54 30" 20z	54 30" 20z	54 30" 20z	62 26" 12z	74 22" 14z	74 22" 14z	88 18" 16z 14d	92 17" 8z 14d	100 16" 8z 14d	112 14" 12z 14d	112 14" 12z 14d	112 14" 12z 14d	112 14" 12z 14d	62 26" 12z 4d	92 11/22" 14z 14d
24'	58 30" 20z	58 30" 20z	58 30" 20z	64 26" 28z	76 22" 22z	76 22" 22z	92 18" 22z 14d	104 16" 24z 14d	104 16" 24z 14d	120 14" 10z 14d	12 14" 10z 14d	120 14" 10z 14d	120 14" 10z 14d	64 26" 28z 4d	94 11/22" 22z 14d
24' 9"	58 30" 26z	58 30" 26z	70 26" 18z	70 26" 18z	78 22" 32z	78 22" 32z	100 18" 20z 14d	106 16" 22z 14d	106 16" 22z 14d	124 14" 18z 14d	124 14" 18z 14d	124 14" 18z 14d	124 14" 18z 14d	70 26" 18z 4d	98 11/22" 32z 14d
26' 3" (8M)	68 30" 26z	68 30" 26z	78 26" 30z	78 26" 30z	92 22" 20z	92 22" 20z	108 18" 28z 16d	122 16" 28z 16d	122 16" 28z 16d	142 14" 28z 16d	142 14" 28z 16d	142 14" 28z 16d	152 13" 22z 16d	78 26" 30z 4d	116 11/22" 20z 16d
27'	74 30" 20z	74 30" 20z	84 26" 26z	84 26" 26z	98 22" 26z	96 22" 26z	118 18" 20z 16d	130 16" 28z 16d	130 16" 28z 16d	152 14" 10z 16d	152 14" 10z 16d	152 14" 10z 16d	156 13" 22z 16d	84 26" 26z 4d	120 11/22" 26z 16d
27' 10"	78 30" 18z	78 30" 18z	88 26" 28z	104 22" 20z	104 22" 20z	104 22" 20z	126 18" 18z 16d	142 16" 22z 16d	142 16" 22z 16d	158 14" 24z 16d	158 14" 24z 16d	158 14" 24z 16d	170 13" 28z 16d	104 22" 20z 4d	130 11/22" 20z 16d
29' 6" (9M)	84 30" 38z	84 30" 38z	98 26" 30z	112 22" 28z	112 22" 28z	138 18" 26z 18d	138 18" 26z 18d	156 16" 22z 18d	156 16" 22z 18d	180 14" 22z 18d	180 14" 22z 18d	180 14" 22z 18d	192 13" 20z 18d	112 22" 28z 4d	146 11/22" 28z 18d
30'	90 30" 20z	90 30" 20z	102 26" 24z	120 22" 24z	120 22" 24z	146 18" 24z 18d	146 18" 24z 18d	164 16" 24z 18d	174 15" 24z 18d	182 14" 20z 18d	182 14" 20z 18d	182 14" 20z 18d	204 13" 22z 18d	120 22" 24z 4d	154 11/22" 24z 18d
31'	100 30" 22z	100 30" 22z	108 26" 28z	126 22" 20z	126 22" 20z	154 18" 12z 18d	154 18" 12z 18d	174 16" 14z 18d	184 15" 16z 18d	196 14" 24z 18d	196 14" 24z 18d	196 14" 24z 18d	214 13" 32z 18d	126 22" 20z 4d	160 11/22" 20z 18d
33'	104 30" 42z	104 30" 42z	122 26" 28z	140 26" 36z	140 22" 36z	170 18" 28z 20d	170 18" 28z 20d	192 16" 36z 20d	202 15" 30z 20d	224 14" 20z 20d	224 14" 20z 20d	224 14" 20z 20d	234 13" 36z 20d	140 22" 36z 4d	176 11/22" 36z 20d
34'	110 30" 30z	110 30" 30z	124 30" 32z	150 26" 26z	150 22" 26z	186 18" 30z 20d	186 18" 30z 20d	204 16" 38z 20d	214 15" 22z 20d	234 14" 30z 20d	234 14" 30z 20d	234 14" 30z 20d	250 13" 14z 20d	150 22" 26z 4d	186 11/22" 26z 20d
36'	126 30" 34z	126 30" 34z	148 26" 32z	170 22" 16z	206 18" 24z 22d	206 18" 24z 22d	206 18" 24z 22d	232 16" 42z 22d	250 15" 32z 22d	264 14" 16z 22d	264 14" 16z 22d	264 14" 16z 22d	284 13" 16z 22d	170 22" 16z 4d	212 11/22" 16z 22d
36' 1" (11M)	128 30" 28z	128 30" 28z	148 26" 32z	170 22" 24z	208 18" 22z 22d	208 18" 22z 22d	208 18" 22z 22d	232 16" 38z 22d	258 15" 20z 22d	266 14" 22z 22d	266 14" 22z 22d	266 14" 22z 22d	286 13" 16z 22d	--- --- --- ---	--- --- --- ---
37' 1"	136 30" 34z	136 30" 34z	154 26" 38z	182 22" 26z	218 18" 20z 22d	218 18" 20z 22d	280 14" 28z 22d	280 14" 28z 22d	280 14" 28z 22d	280 14" 28z 22d	302 13" 24z 22d	328 12" 28z 22d	328 12" 28z 22d	--- --- --- ---	--- --- --- ---
42' Split	168 30" 156z	192 26" 148z	192 26" 148z	224 22" 126z	278 18" 84z 24d	278 18" 84z 24d	356 14" 84z 24d	356 14" 84z 24d	356 14" 84z 24d	356 14" 84z 24d	384 13" 84z 24d	414 12" 52z 24d	414 12" 52z 24d	--- --- --- ---	--- --- --- ---
42' 8" (13M) Split	172 30" 114z	200 26" 102z	200 26" 102z	238 22" 117z	290 18" 86z 24d	290 18" 86z 24d	372 14" 90z 24d	372 14" 90z 24d	372 14" 90z 24d	372 14" 90z 24d	398 13" 82z 24d	430 12" 66z 24d	430 12" 66z 24d	--- --- --- ---	--- --- --- ---
43' 3" Split	178 30" 160z	206 26" 168z	206 26" 168z	240 22" 123z	292 18" 97z 26d	292 18" 97z 26d	372 14" 107z 26d	372 14" 107z 26d	372 14" 107z 26d	372 14" 107z 26d	398 13" 94z 26d	434 12" 70z 26d	434 12" 70z 26d	--- --- --- ---	--- --- --- ---
48' Split	250 26" 184z	250 26" 184z	250 26" 184z	296 22" 150z	358 18" 126z 28d	358 18" 126z 28d	460 14" 102z 28d	460 14" 102z 28d	460 14" 102z 28d	460 14" 102z 28d	494 13" 96z 28d	532 12" 86z 28d	532 12" 86z 28d	--- --- --- ---	--- --- --- ---
49' 3" (15M) Split	264 26" 188z	264 26" 188z	308 22" 158z	308 22" 158z	374 18" 119z 28d	374 18" 119z 28d	484 14" 117z 28d	484 14" 117z 28d	484 14" 117z 28d	484 14" 117z 28d	512 13" 112z 28d	562 12" 76z 28d	562 12" 76z 28d	--- --- --- ---	--- --- --- ---
54' Split	322 26" 220z	322 26" 220z	374 22" 160z	448 18" 120z 32d	448 18" 120z 32d	448 18" 120z 32d	582 14" 120z 32d	582 14" 120z 32d	620 13" 112z 32d	674 12" 100z 32d	674 12" 100z 32d	674 12" 100z 32d	674 12" 100z 32d	--- --- --- ---	--- --- --- ---
55' 8" Split	332 26" 216z	332 26" 216z	396 22" 163z	482 18" 118z 32d	482 18" 118z 32d	482 18" 118z 32d	618 14" 110z 32d	618 14" 110z 32d	664 13" 114z 32d	720 12" 75z 32d	720 12" 75z 32d	720 12" 75z 32d	720 12" 75z 32d	--- --- --- ---	--- --- --- ---
59' 1" (18M) Split	378 26" 224z	378 26" 224z	446 22" 180z	542 18" 128z 34d	542 18" 128z 34d	542 18" 128z 34d	694 14" 128z 34d	694 14" 128z 34d	746 13" 128z 34d	812 12" 100z 34d	812 12" 100z 34d	812 12" 100z 34d	812 12" 100z 34d	--- --- --- ---	--- --- --- ---
60' Split	386 26" 232z	386 26" 232z	452 22" 186z	554 18" 134z 34d	554 18" 134z 34d	554 18" 134z 34d	706 14" 142z 34d	706 14" 142z 34d	758 13" 130z 34d	822 12" 110z 34d	822 12" 110z 34d	822 12" 110z 34d	822 12" 110z 34d	--- --- --- ---	--- --- --- ---
61' 10" Split	416 26" 244z	416 26" 244z	484 22" 190z	594 18" 150z 36d	594 18" 150z 36d	594 18" 150z 36d	764 14" 136z 36d	816 13" 142z 36d	816 13" 142z 36d	886 12" 86z 36d	886 12" 86z 36d	886 12" 86z 36d	886 12" 86z 36d	--- --- --- ---	--- --- --- ---
72' Split	554 26" 268z	654 22" 228z	654 22" 228z	798 18" 140z 42d	798 18" 140z 42d	1028 14" 152z 42d	1028 14" 152z 42d	1118 13" 140z 42d	1118 13" 140z 42d	1192 12" 98z 42d	1310 11" 52z 42d	1434 10" 26z 42d	1434 10" 26z 42d	--- --- --- ---	--- --- --- ---
75' Split	600 26" 284z	704 22" 234z	704 22" 234z	864 18" 168z 44d	864 18" 168z 44d	1104 14" 160z 44d	1104 14" 160z 44d	1188 13" 156z 44d	1188 13" 156z 44d	1288 12" 124z 44d	1402 11" 60z 44d	1544 10" 62z 44d	1544 10" 62z 44d	--- --- --- ---	--- --- --- ---
78' Double Split	652 26" 412z	768 22" 327z	768 22" 327z	934 18" 250z 46d	934 18" 250z 46d	1206 14" 230z 46d	1206 14" 230z 46d	1310 13" 212z 46d	1310 13" 212z 46d	1404 12" 154z 46d	1536 11" 50z 46d	1678 10" 58z 46d	1678 10" 58z 46d	--- --- --- ---	--- --- --- ---

©11/7/2022

Ladder Fall Protection

In January 2017, OSHA released new requirements under the Code of Federal Regulations (CFR) Title 29, Part 1910, Sub-part D (Walking-Working Surfaces) stating that ladder safety cages are no longer considered adequate fall protection. Instead, OSHA is requiring employers and site owners use new types of fall protection devices when employees are asked to climb fixed ladders that extend more than 24' above a lower level. The new requirements took effect in November 2018.

The followings section taken from OSHA's updated regulations describes the new requirements:

1910.28(b)(9)(i): For fixed ladders that extend more than 24' above a lower level, the employer must ensure:

(A) Each fixed ladder installed before November 19, 2018, is equipped with a personal fall arrest system, ladder safety system, cage or well;

(B) Each fixed ladder installed on or after November 19, 2018, is equipped with a personal fall arrest system or ladder safety system;

(C) When a fixed ladder, cage or well or a portion of a section thereof, is replaced, a personal fall arrest system or ladder safety system is installed in at least that section of the fixed ladder, cage or well where the replacement is located and;

(D) on and after November 18, 2036, all fixed ladders are equipped with a personal fall arrest system or a ladder safety system. It should be noted that "lower level" references ground level and not an intermediate platform between sections of fixed ladder.

Main Office: 1110 Clyde Marengo Rd. Clyde, NY 14433

Phone: (315) 923-9118
Parts: Parts@anmartinsystems.com
Farm Salels: LydellMartin@anmartinsystems.com
Jeffrey@anmartinsystems.com
Commercial Sales: Brian@anmartinsystems.com

Western NY Office: 7695 Big Tree Rd. Pavilion, NY 14525

Phone: (585) 584-9210
Sales: Josh DeGroff (585) 519-2132 Josh@anmartinsystems.com
Parts: Josh Brown PartsWest@anmartinsystems.com
Fabrication: Larry@anmartinsystems.com

www.anmartinsystems.com

Sukup Manufacturing

Owner's Manuals: ***www.sukup.com/manuals***
Product Literature & Brochures: ***www.sukup.com/brochures***

GSI-Farm Fans-DMC-Zimmerman-Intersystems

Owner's Manuals: ***www.grainsystems.com/resources/manuals***
Product Literature & Brochures: ***www.grainsystems.com/resources/brochures***

Hutchinson-Mayrath

Owner's Manuals: **Not available online, please call our office**
Product Literature & Brochures: ***www.hutchinson-mayrath.com***

Honeyville Metal

Owner's Manuals: ***www.honeyvillemetal.com/product-manuals***
Product Literature & Brochures: ***www.honeyvillemetal.com/product-brochures***

Lambton Conveyor

www.lambtonconveyor.com

Shivvers Manufacturering

Owner's Manuals: ***www.shivvers.com/shivvers-advantage/support-services/product-manuals***
Product Literature & Brochures: ***www.shivvers.com***

Dickey-john Moisture Testers

Owner's Manuals: ***www.dickey-john.com/support***
Product Literature & Brochures: ***www.dickey-john.com/products/agricultural/moisture-testing***

Farm King Cleaners

Owner's Manuals: ***www.farm-king.com/pages/product_gh_gc.php#Manuals***
Product Literature & Brochures: ***www.farm-king.com/downloads/brochure/FK_brochure_GH.pdf***

Sukup
Largest
Inventory
In The
Northeast!
315-923-9118
Same Day Shipping
On Most Items